CARVER COURT SUBDIVISION

TOWN OF EAST GREENBUSH * RENSSELAER COUNTY * STATE OF NEW YORK

APPLICANT:
CLDZ LLC
494 WESTERN TURNPIKE
ALTAMONT, NY 12009

PREPARED BY:
BRETT L. STEENBURGH, P.E. LLC

2832 ROSENDALE ROAD
NISKAYUNA, NY 12309
(518) 365-0675
bsteenburghpe@yahoo.com

CIVIL ENVIRONMENTAL STRUCTURAL

SITE LOCATION MAP

LEGEND	
SHEET	DESCRIPTION
OVERALL	OVERALL PLAN
EX-1	EXISTING CONDITIONS PLAN
P-1	SUBDIVISION PLAT 1
P-2	SUBDIVISION PLAT 2
P-3	SUBDIVISION PLAT 3
SP-1	SITE PLAN 1
SP-2	SITE PLAN 2
SP-3	SITE PLAN 3
SP-4	SITE PLAN 4
GP-1	GRADING PLAN 1
GP-2	GRADING PLAN 2
GP-3	GRADING PLAN 3
GP-4	GRADING PLAN 4
U-1	UTILITY PLAN 1
U-2	UTILITY PLAN 2
U-3	UTILITY PLAN 3
U-4	UTILITY PLAN 4
P-1	PROFILES 1
P-2	PROFILES 2
P-3	PROFILES 3
P-4	PROFILES 4
ESC-1	EROSION AND SEDIMENT CONTROL PLAN 1
ESC-2	EROSION AND SEDIMENT CONTROL PLAN 2
ESC-3	EROSION AND SEDIMENT CONTROL PLAN 3
ESC-4	EROSION AND SEDIMENT CONTROL PLAN 4
P-1	PHASING PLAN
L-1	BIO-RETENTION LANDSCAPING PLAN
DET-1	DETAILS
DET-2	DETAILS
DET-3	DETAILS
DET-4	DETAILS

SITE ZONING

EXISTING ZONING:
ZONE: COMMERCIAL RESIDENTIAL BUFFER R-B
MINIMUM LOT SIZE: 21,780 S.F.
MINIMUM FRONTAGE: 100 FT
MAXIMUM COVERAGE: 10%
MINIMUM FRONT YARD: 25 FT
MINIMUM SIDE YARD: 10 FT
MINIMUM REAR YARD: 30 FT
MAXIMUM BUILD OUT CONVENTIONAL YIELDS 110 LOTS

PROPOSED CLUSTER SUBDIVISION
MINIMUM LOT SIZE: 7,000 S.F.
MINIMUM FRONTAGE: 50 FT
MAXIMUM COVERAGE: 30%
MINIMUM FRONT YARD: 20 FT
MINIMUM SIDE YARD: 0 – 8 FT
MINIMUM REAR YARD: 20 FT

SITE STATISTICS
CLUSTER SUBDIVISION

SBL 145-1-21, 155-5-4, 155-5-4, 155-5-2 & 155-5-3 (PORTION)
AREA = 89.99± AC.
9.20± AC. USACOE JURISDITIONAL WETLANDS
2.56± AC. SLOPES EXCEEDING 15%
78.22± AC. BUILDABLE AREA BY CODE
MIN. 15.64± TO BE OPEN SPACE BY CODE
USE: CLUSTER SUBDIVISION – 110 BUILDING LOTS
TOTAL OPEN SPACE AREA = 46.80 AC.
52.0% TOTAL AREA BY CODE
COMPRISED OF THE FOLLOWING:
–35.60 AC. OPEN SPACE (UPLAND SLOPES LESS THAN 15%)
MIN. 15.64± BY CODE
–8.95 AC. OPEN SPACE (WETLAND)
–2.20 AC. STEEP SLOPES
LINEAL FOOTAGE OF TOWN ROAD = 6,048 L.F.
TOTAL ROW AREA = 7.65 AC.
STORMWATER MANAGEMENT LOTS = 5.65 AC.
EXISTING DEEDED ROW = 0.37 AC.
PROPOSED BUILDING LOTS = 28.69 AC.
WETLAND MITIGATION = 0.59 AC.*
*WETLAND MITIGATION AREA NOT INCLUDED IN OPEN SPACE AREA CALC. HOWEVER WE BELIEVE IT QUALIFIES
TOTAL WETLAND IMPACTS = 0.194± AC.

LEGEND

T-# TOWNHOME BUILDING LOT
TOTAL 60 LOTS

C-# COTTAGE HOME BUILDING LOT
TOTAL 36 LOTS

E-# ESTATE HOME BUILDING LOT
TOTAL 14 LOTS

CADD FILE: 9HOLEDF | JOB NO. 97079

SITE ZONING

EXISTING ZONING:
ZONE: COMMERCIAL RESIDENTIAL BUFFER R–B
MINIMUM LOT SIZE: 21,780 S.F.
MINIMUM FRONTAGE: 100 FT
MAXIMUM COVERAGE: 10%
MINIMUM FRONT YARD: 25 FT
MINIMUM SIDE YARD: 10 FT
MINIMUM REAR YARD: 30 FT
MAXIMUM BUILD OUT CONVENTIONAL YIELDS 110 LOTS

PROPOSED CLUSTER SUBDIVISION
MINIMUM LOT SIZE: 7,000 S.F.
MINIMUM FRONTAGE: 50 FT
MAXIMUM COVERAGE: 30%
MINIMUM FRONT YARD: 20 FT
MINIMUM SIDE YARD: 0 – 8 FT
MINIMUM REAR YARD: 20 FT
MAXIMUM BLDG. HEIGHT: 35 FT

SITE STATISTICS
CLUSTER SUBDIVISION

SBL 145–1–21, 155–5–4, 155–5–4, 155–5–2 & 155–5–3 (PORTION)
AREA = 89.99± AC.
9.20± AC. USACOE JURISDITIONAL WETLANDS
2.56± AC. SLOPES EXCEEDING 15%
78.22± AC. BUILDABLE AREA BY CODE
MIN. 15.64± TO BE OPEN SPACE BY CODE
USE: CLUSTER SUBDIVISION – 110 BUILDING LOTS
TOTAL OPEN SPACE AREA = 46.80 AC.
52.0% TOTAL AREA BY CODE
COMPRISED OF THE FOLLOWING:
–35.60 AC. OPEN SPACE (UPLAND SLOPES LESS THAN 15%)
MIN. 15.64± BY CODE
–8.95 AC. OPEN SPACE (WETLAND)
–2.20 AC. STEEP SLOPES
LINEAL FOOTAGE OF TOWN ROAD = 6,048 L.F.
TOTAL ROW AREA = 7.65 AC.
STORMWATER MANAGEMENT LOTS = 5.65 AC.
EXISTING DEEDED ROW = 0.37 AC.
PROPOSED BUILDING LOTS = 28.69 AC.
WETLAND MITIGATION = 0.59 AC.*
*WETLAND MITIGATION AREA NOT INCLUDED IN OPEN SPACE AREA CALC. HOWEVER WE BELIEVE IT QUALIFIES
TOTAL WETLAND IMPACTS = 0.194± AC.

LEGEND

T–#	TOWNHOME BUILDING LOT TOTAL 60 LOTS
C–#	COTTAGE HOME BUILDING LOT TOTAL 36 LOTS
E–#	ESTATE HOME BUILDING LOT TOTAL 14 LOTS

GENERAL NOTES

1. UNDERGROUND UTLITIES SHOWN ON THIS PLAN HAVE BEEN BASED UPON THE MAP REFERENCE AND A FIELD REIVIEW AND SHOULD BE CONSIDERED SCHEMATIC ONLY AND ARE SHOWN TO DEPICT GENERAL UTILITY CONNECTIONS RATHER THAN EXACT UNDERGROUND LOCATIONS. BRETT L. STEENBURGH PE PLLC MAKE NO CERTIFICATION AS TO THE ACCURACY OF THE UNDERGROUND UTILITY LOCATIONS AND OTHER UTILITIES MAY EXIST THAT ARE NOT SHOWN ON THIS MAP.
2. PRIOR TO CONSTRUCTION, THE CONTRACTOR SHALL VERIFY ALL DIMENSIONS, GRADES, ELEVATIONS, AND MATERIALS GIVEN ON THE PLANS.
3. EXCESS BUILDING MATERIAL AND CLEARING DEBRIS SHALL BE DISPOSED OF OFF SITE.
4. IT SHALL BE THE CONTRACTOR RESPONISBILITY TO REPLACE OR REPAIR AT HIS/ HER COST ANY DAMAGE TO EXISITING ON SITE UTILITIES.
5. IT IS THE INTENT OF THESE PLANS TO BE IN STRICT CONFORMANCE WITH ALL TOWN OF EAST GREENBUSH, COUNTY OF RENSSELAER, STATE OF NEW YORK, AND APPLICABLE FEDERAL RULES REGULATIONS, AND LAWS. IF CONFLICTS ARE NOTED BETWEEN THE ABOVE, AND THESE PLANS, IT SHALL BE BROUGHT TO THE ATTENTION OF THE DESIGN ENGINEER AND THE TOWN ENGINEER.
6. CONFLICTS SHOWN ON PLANS OR BETWEEN THE PLANS AND SPECIFICATIONS SHALL BE BROUGHT TO THE ATTENTION OF THE OWNER, OWNER REPRESENTATIVE AND/OR ENGINEER.

GRADING & DRAINAGE NOTES

1. ALL STRUCTURES SHALL HAVE GUTTERS CONSTRUCTED ON THEM. THE GUTTERS SHALL DISCHARGE EITHER DIRECTLY TO THE STORM SEWER OR IN SUCH A WAY TO PROVIDE POSITIVE DRAINAGE TO THE STORM SEWERS.
2. ALL DRIVEWAYS SHALL BE GRADED TO DIRECT RUNOFF DIRECTLY TO THE ROADS AND STORM SEWER.
3. UNDER NO CIRCUMSTANCES SHALL ANY RUNOFF FROM A CONSTRUCTED IMPERVIOUS SURFACE BE DISCHARGED DIRECTLY TO THE ON SITE WETLANDS.
4. THE MAXIMUM SLOPE SHALL BE A 3 HORIZONTAL TO 1 VERTICAL.
5. A POSITIVE SLOPE SHALL BE MAINTAINED AWAY FROM ALL STRUCTURES.
6. SOILS CONSIST OF APPROXIMATELY 42" OF SILTY GRAVEL OVER LOOSE SHALE BEDROCK.

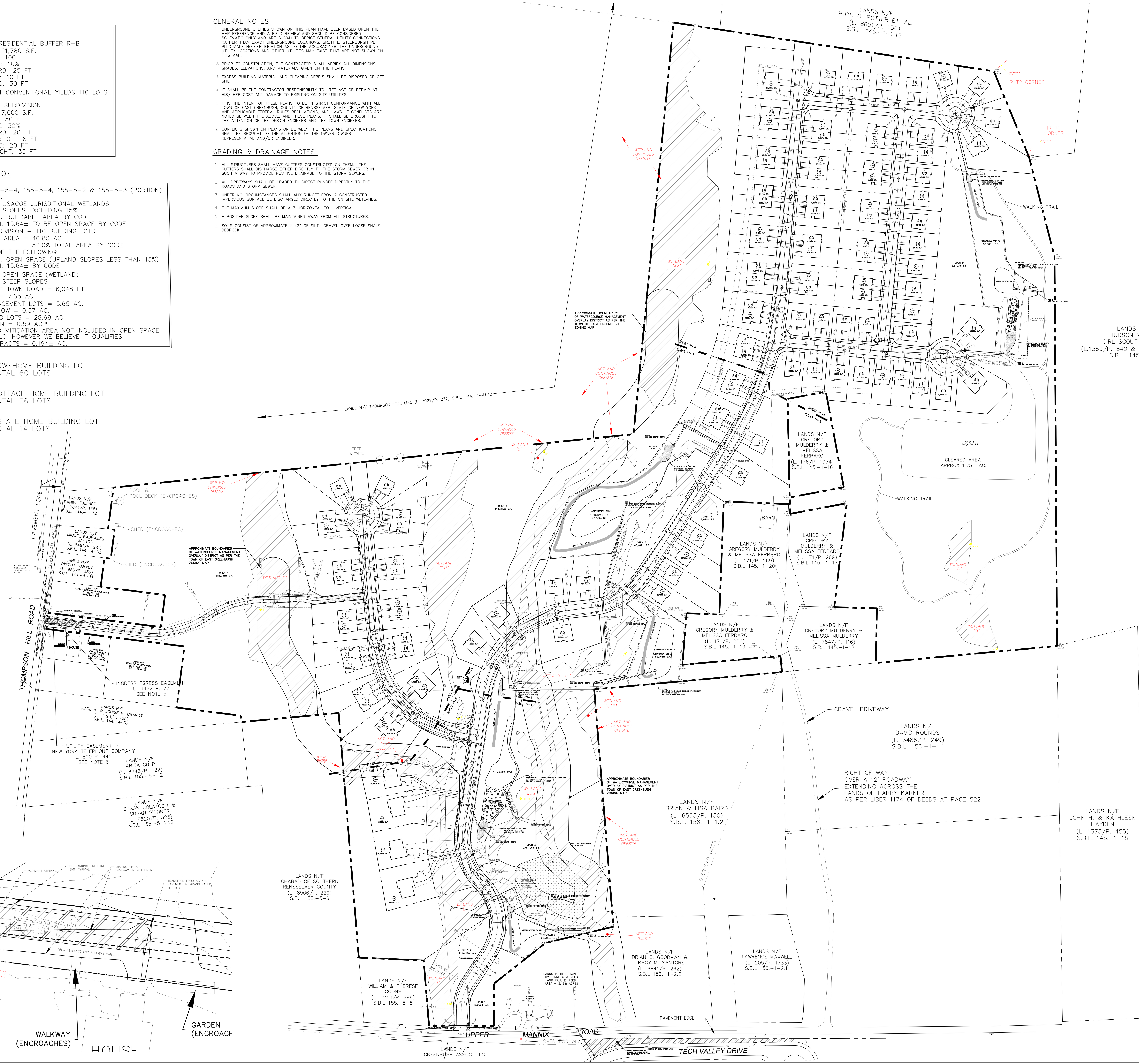

NOTE: 48 HOURS PRIOR TO ANY CONSTRUCTION ACTIVITIES, THE CONTRACTOR SHALL CONTACT THE U.F.P.O. TO LOCATE ALL UNDERGROUND UTILITIES. 1–800–962–7962

NO.	DATE:	REVISIONS	BY:
3	01/25/22	REVISED AS PER TDE AND E. GREENBUSH COMMENTS	
2	11/03/21	REVISED AS PER CAC AND USACOE COMMENTS	
1	7/27/21	REVISED AS PER TDE COMMENTS DATED 7/8/21	

BRETT L. STEENBURGH, P.E.
N.Y.S. LIC. NO. 075458

APPLICANT:
CLDZ LLC
494 WESTERN TURNPIKE
ALTAMONT, NY 12009

BRETT L. STEENBURGH, P.E. PLLC
2832 Rosendale Road
Niskayuna, NY 12309
(518) 365–0675
bsteenburghpe@gmail.com
ENGINEERING THAT TRANSFORMS IMAGINATION INTO REALITY
A comprehensive civil engineering firm with a personal touch

OVERALL PLAN
CLDZ, LLC
CARVER COURT
TOWN OF EAST GREENBUSH
COUNTY OF RENSSELAER STATE OF NEW YORK

DRAWN BY: BLS
CADD FILE:
CHECKED BY:
JOB NO.
DATE: FEBRUARY 15, 2021
SCALE: 1" = 100'
SHEET SP–1

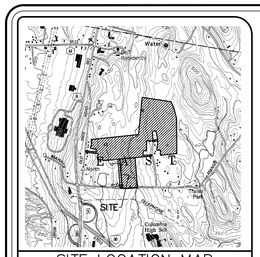

SITE LOCATION MAP

SCALE: 1" = 2000'

WATERS OF THE UNITED STATES	
WETLAND TABLE:	
WETLAND A1 AREA:	1.51± ACRES
WETLAND A2 AREA:	3.74± ACRES
WETLAND B AREA:	0.28± ACRES
WETLAND C AREA:	0.23± ACRES
WETLAND D AREA:	0.06± ACRES
WETLAND E AREA:	1.11± ACRES
WETLAND F,H AREA:	1.87± ACRES
WETLAND G AREA:	2.05± ACRES
WETLAND I,J,S1 AREA:	1.74± ACRES
TOTAL WETLAND AREA:	12.59 ACRES

LEGEND

- IRON ROD FOUND
- POWER/UTILITY POLE
- IRON PIPE FOUND
- HYDRANT
- WATER VALVE
- WETLAND FLAG
- CATV BOX
- TEL BOX
- PROPERTY LINE
- 500 EXISTING CONTOUR
- OVERHEAD UTILITY LINE
- EASEMENT
- WETLAND AREA

NOTES:

1) SURVEYED PARCELS: TOWN OF EAST GREENBUSH – TAX MAP 145, BLOCK 1, PARCEL 21 & TAX MAP 155.00 BLOCK 5 PARCEL 4.

2) SURVEY PREPARED BY INGALLS AND ASSOCIATES, LLP FROM A JULY 2019 FIELD SURVEY. WETLANDS AREA SURVEY PREPARED BY INGALLS AND ASSOCIATES, LLP FROM A JULY 2019 FIELD DELINEATION.

3) NORTH IS REFERENCED TO NAD 83 NEW YORK STATE PLANES, EAST ZONE. FIELD DATUM ELEVATION IS REFERENCED TO NAVD 1988.

4) SUBJECT TO THE RIGHT OF THE PUBLIC TO THAT PORTION OF LANDS LYING WITHIN THE RIGHT OF WAY FOR UPPER MANNIX ROAD AND THOMPSON HILL ROAD.

5) SUBJECT TO A NON-EXCLUSIVE INGRESS AND EGRESS EASEMENT AS RECITED IN LIBER 4472 AT PAGE 77 WITH REFERENCE TO SMITH LANE FOR THE THE BENEFIT OF PROPERTY KNOWN AS 42 THOMPSON HILL ROAD.

6) SUBJECT TO AN EASEMENT GRANTED TO NEW YORK TELEPHONE COMPANY FOR ELECTRIC AND COMMUNICATION FACILITIES AS RECITED IN LIBER 890 AT PAGE 445.

7) SUBJECT TO A 50 FT WIDE RIGHT OF WAY AS RECITED IN LIBER 1174 OF DEEDS AT PAGE 522.

8) SUBJECT TO ALL OTHER RIGHTS, EASEMENTS, COVENANTS OR RESTRICTION; RECORDED OR UNRECORDED.

9) SUBJECT TO ANY STATEMENT OF FACT CONTAINED IN COMMITMENT OF TITLE INSURANCE NO. CT19-42011 AS PREPARED BY JEM COMPANY, INC. FOR CHICAGO TITLE INSURANCE COMPANY AND HAVING AN EFFECTIVE DATE OF MAY 2, 2019.

10) UNDERGROUND UTILITIES IF SHOWN HEREON ARE BASED ON VISIBLE PHYSICAL EVIDENCE. THEY SHOULD BE CONSIDERED SCHEMATIC ONLY AND ARE SHOWN TO DEPICT GENERAL UTILITY LOCATIONS AND CONNECTIONS RATHER THAN EXACT UNDERGROUND LOCATIONS. INGALLS & ASSOCIATES, LLP MAKES NO CERTIFICATION AS TO THE ACCURACY OF THE UNDERGROUND UTILITY LOCATIONS AND OTHER UTILITIES MAY EXIST THAT ARE NOT SHOWN ON THIS MAP.

11) SURVEY IS PREPARED IN ACCORDANCE WITH THE NEW YORK STATE ASSOCIATION OF PROFESSIONAL LAND SURVEYORS CODE OF PRACTICE FOR LAND SURVEYS AS ADOPTED IN OCTOBER OF 1966 AND LAST REVISED ON JULY 18, 1997.

12) NO WETLAND SURVEY SHALL BE DEEMED FINAL WITHOUT A JURISDICTIONAL DETERMINATION FROM THE UNITED STATES ARMY CORPS OF ENGINEERS (USACE) AND/OR THE NEW YORK STATE DEPARTMENT OF ENVIRONMENTAL CONSERVATION (NYSDEC).

13) ENCROACHMENTS ARE PRESENT ON SUBJECT PARCEL AND ARE AS SHOWN AS FIELD LOCATED.

DEED REFERENCES:

1) SUBJECT PROPERTY CONVEYED BY JAMES J. GILLESPIE, LAMBERT L. GINSBERG, IRWIN M. STROSBERG, EDWARD L. BOOKSTEIN, EUGENE M. KARP AND RICHARD A. KOHN TO EGV REALTY, INC. BY DEED DATED AUGUST 4, 1993 AND RECORDED IN THE RENSSELAER COUNTY CLERK'S OFFICE ON AUGUST 23, 1993 IN LIBER 1697 OF DEEDS AT PAGE 133.

2) SUBJECT PROPERTY CONVEYED BY EGV REALTY, INC. TO CLDZ, LLC BY DEED DATED JULY 26, 2019 AND RECORDED IN THE RENSSELAER COUNTY CLERK'S OFFICE ON AUGUST 1, 2019 IN LIBER 8903 OF DEEDS AT PAGE 96.

3) SUBJECT PROPERTY CONVEYED BY BERNETA M. REED AND PAUL E. REED TO CLDZ, LLC BY DEED DATED NOVEMBER 18, 2020 AND RECORDED IN THE RENSSELAER COUNTY CLERK'S OFFICE ON DECEMBER 8, 2020 IN LIBER 9390 OF DEEDS AT PAGE 260.

MAP REFERENCES:

1) MAP ENTITLED "CARVER COURT, AS PREPARED BY BREWER ENGINEERING ASSOCIATES, P.C. ON DECEMBER 12, 2009.

2) MAP ENTITLED "LOT LINE ADJUSTMENT PLAT BETWEEN LANDS N/F OF REED AND CLDZ, LLC, MANNIX ROAD" AS PREPARED BY INGALLS & ASSOCIATES, LLP ON JUNE 9, 2020 AND FILED IN THE RENSSELAER COUNTY CLERK'S OFFICE AS MAP 2020-103.

GENERAL SOILS NOTE:

1) SOILS CONSIST OF APPROXIMATLEY 42" OF SILTY GRAVEL OVER LOOSE SHALE.

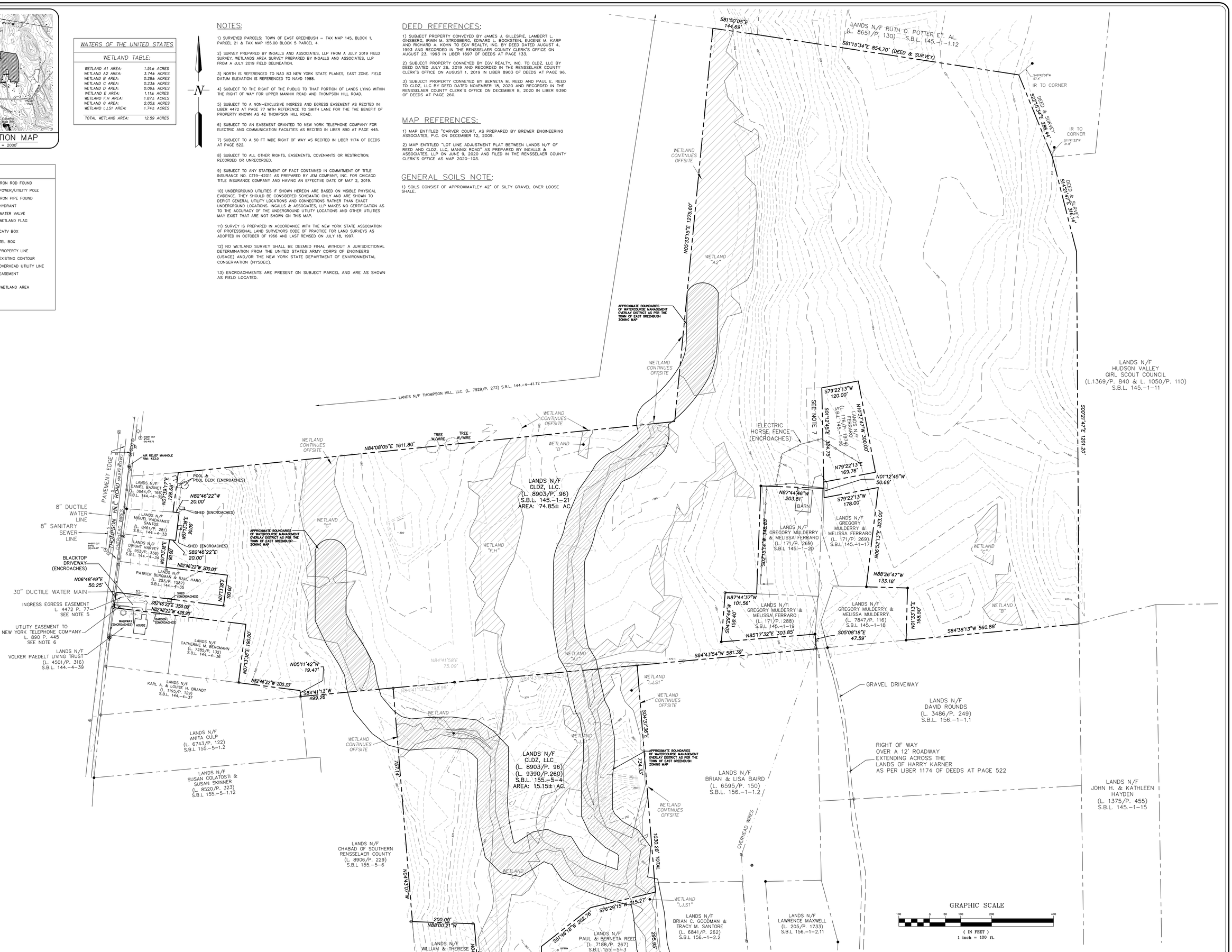

NO.	DATE:	REVISIONS	BY:
2	01/25/22	WATERCOURSE OVERLAY DISTRICT, SOILS NOTE ADDED	RDF
1	11/24/21	DEED AND MAP REFERENCE ADDED	RDF

UNAUTHORIZED ALTERATION OR ADDITION TO THIS DRAWING IS A VIOLATION OF SECTION 7209 SUBDIVISION 2, OF THE NEW YORK STATE EDUCATION LAW. ONLY COPIES MADE FROM THE ORIGINAL OF THIS DRAWING BEARING AN ORIGINAL INKED OR EMBOSSED SEAL AND SIGNATURE SHALL BE CONSIDERED TO BE VALID TRUE COPIES.

© Copyright 2022 - Ingalls & Associates, LLP - All rights reserved

STATE OF NEW YORK JOHN J. POST LICENSED LAND SURVEYOR

JOHN J. POST, JR., L.S.
N.Y.S. LIC. NO. 050643

ingalls
ingalls & associates, LLP
engineering, environmental, surveying
2603 GUILDERLAND AVENUE
SCHENECTADY, N.Y. 12306
PHONE: (518) 393-7725
FAX: (518) 393-2324

EXISTING CONDITIONS
LANDS N/F CLDZ, LLC
UPPER MANNIX ROAD & THOMPSON HILL ROAD
TOWN OF EAST GREENBUSH
COUNTY OF RENSSELAER STATE OF NEW YORK

DATE: AUGUST 11, 2021 | CHECKED BY: JJP | JOB NO. 19-083 | SCALE: 1"=100'

DRAWN BY: VCD
CADD FILE: 19-083 EX REED ADDED

SHEET EX-1

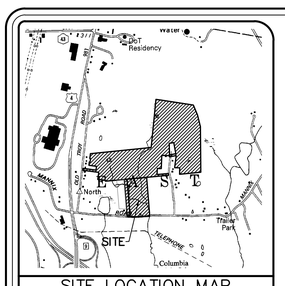

SITE LOCATION MAP
SCALE: 1" = 2000'

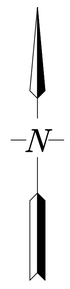

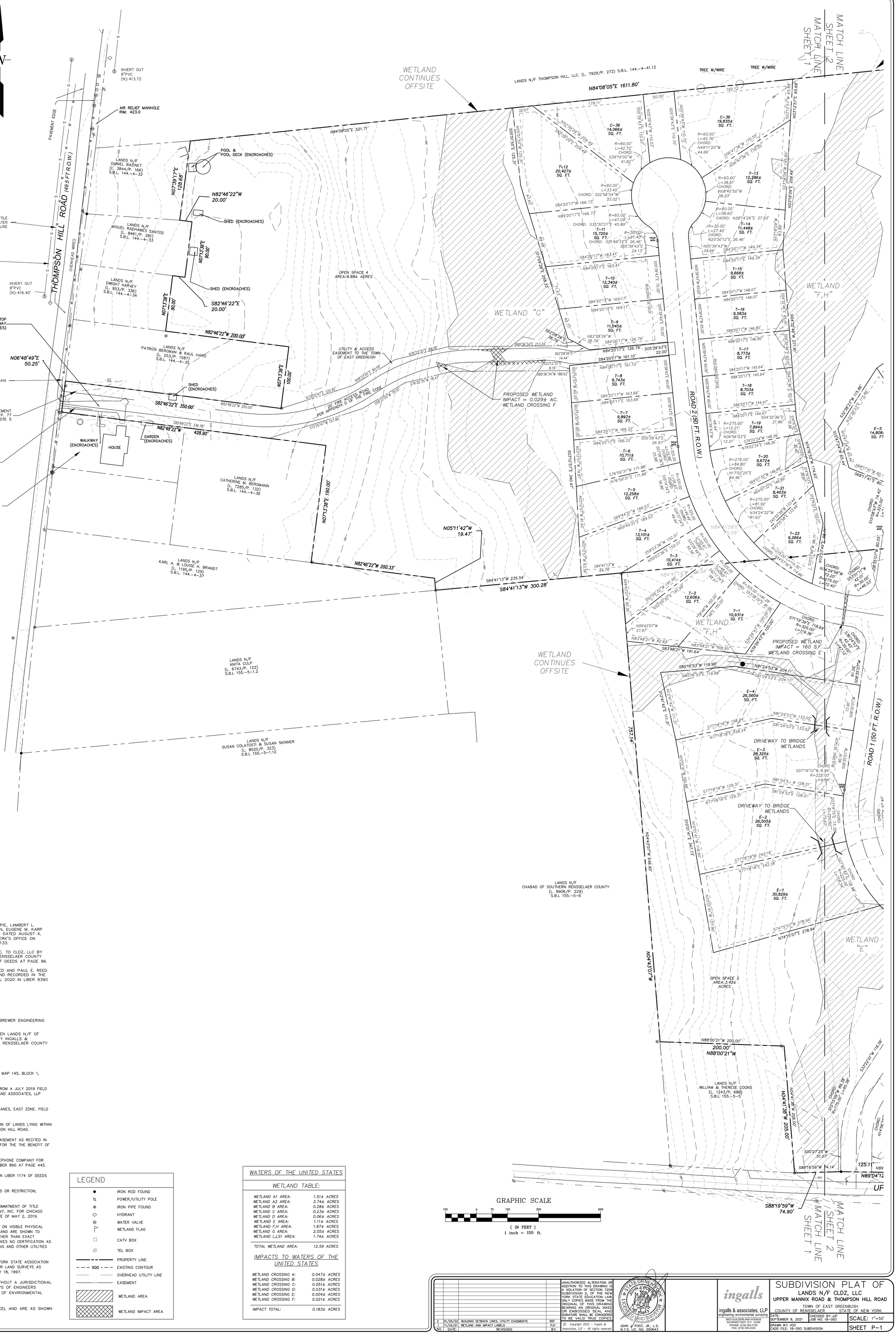

LOT BREAKDOWN

T-# TOWNHOME BUILDING LOT
TOTAL: 60 LOTS

C-# COTTAGE BUILDING LOT
TOTAL: 36 LOTS

E-# ESTATE HOME BUILDING LOT
TOTAL: 14 LOTS

DEED REFERENCES:

1) SUBJECT PROPERTY CONVEYED BY JAMES J. GILLESPIE, LAMBERT L. GINSBERG, IRWIN M. STROSBERG, EDWARD L. BOOKSTEIN, EUGENE M. KARP AND RICHARD A. KOHN TO EGV REALTY, INC. BY DEED DATED AUGUST 4, 1993 AND RECORDED IN THE RENSSELAER COUNTY CLERK'S OFFICE ON AUGUST 23, 1993 IN LIBER 1697 OF DEEDS AT PAGE 133.

2) SUBJECT PROPERTY CONVEYED BY EGV REALTY, INC. TO CLDZ, LLC BY DEED DATED JULY 26, 2019 AND RECORDED IN THE RENSSELAER COUNTY CLERK'S OFFICE ON AUGUST 1, 2019 IN LIBER 8903 OF DEEDS AT PAGE 96.

3) SUBJECT PROPERTY CONVEYED BY BERNETA M. REED AND PAUL E. REED TO CLDZ, LLC BY DEED DATED NOVEMBER 18, 2020 AND RECORDED IN THE RENSSELAER COUNTY CLERK'S OFFICE ON DECEMBER 8, 2020 IN LIBER 9390 OF DEEDS AT PAGE 260.

MAP REFERENCES:

1) MAP ENTITLED "CARVER COURT, AS PREPARED BY BREWER ENGINEERING ASSOCIATES, P.C. ON DECEMBER 12, 2009.

2) MAP ENTITLED "LOT LINE ADJUSTMENT PLAT BETWEEN LANDS N/F OF REED AND CLDZ, LLC, MANNIX ROAD" AS PREPARED BY INGALLS & ASSOCIATES, LLP ON JUNE 9, 2020 AND FILED IN THE RENSSELAER COUNTY CLERK'S OFFICE AS MAP 2020-103.

NOTES:

1) SURVEYED PARCELS: TOWN OF EAST GREENBUSH – TAX MAP 145, BLOCK 1, PARCEL 21 & TAX MAP 155.00 BLOCK 5 PARCEL 4.

2) SURVEY PREPARED BY INGALLS AND ASSOCIATES, LLP FROM A JULY 2019 FIELD SURVEY. WETLANDS AREA SURVEY PREPARED BY INGALLS AND ASSOCIATES, LLP FROM A JULY 2019 FIELD DELINEATION.

3) NORTH IS REFERENCED TO NAD 83 NEW YORK STATE PLANES, EAST ZONE. FIELD DATUM ELEVATION IS REFERENCED TO NAVD 1988.

4) SUBJECT TO THE RIGHT OF THE PUBLIC TO THAT PORTION OF LANDS LYING WITHIN THE RIGHT OF WAY FOR UPPER MANNIX ROAD AND THOMPSON HILL ROAD.

5) SUBJECT TO A NON-EXCLUSIVE INGRESS AND EGRESS EASEMENT AS RECITED IN LIBER 4472 AT PAGE 77 WITH REFERENCE TO SMITH LANE FOR THE THE BENEFIT OF PROPERTY KNOWN AS 42 THOMPSON HILL ROAD.

6) SUBJECT TO AN EASEMENT GRANTED TO NEW YORK TELEPHONE COMPANY FOR ELECTRIC AND COMMUNICATION FACILITIES AS RECITED IN LIBER 890 AT PAGE 445.

7) SUBJECT TO A 50 FT WIDE RIGHT OF WAY AS RECITED IN LIBER 1174 OF DEEDS AT PAGE 522.

8) SUBJECT TO ALL OTHER RIGHTS, EASEMENTS, COVENANTS OR RESTRICTION; RECORDED OR UNRECORDED.

9) SUBJECT TO ANY STATEMENT OF FACT CONTAINED IN COMMITMENT OF TITLE INSURANCE NO. CT19-42011 AS PREPARED BY JEM COMPANY, INC. FOR CHICAGO TITLE INSURANCE COMPANY AND HAVING AN EFFECTIVE DATE OF MAY 2, 2019.

10) UNDERGROUND UTILITIES IF SHOWN HEREON ARE BASED ON VISIBLE PHYSICAL EVIDENCE. THEY SHOULD BE CONSIDERED SCHEMATIC ONLY AND ARE SHOWN TO DEPICT GENERAL UTILITY LOCATIONS AND CONNECTIONS RATHER THAN EXACT UNDERGROUND LOCATIONS. INGALLS & ASSOCIATES, LLP MAKES NO CERTIFICATION AS TO THE ACCURACY OF THE UNDERGROUND UTILITY LOCATIONS AND OTHER UTILITIES MAY EXIST THAT ARE NOT SHOWN ON THIS MAP.

11) SURVEY IS PREPARED IN ACCORDANCE WITH THE NEW YORK STATE ASSOCIATION OF PROFESSIONAL LAND SURVEYORS CODE OF PRACTICE FOR LAND SURVEYS AS ADOPTED IN OCTOBER OF 1966 AND LAST REVISED ON JULY 18, 1997.

12) NO WETLAND SURVEY SHALL BE DEEMED FINAL WITHOUT A JURISDICTIONAL DETERMINATION FROM THE UNITED STATES ARMY CORPS OF ENGINEERS (USACE) AND/OR THE NEW YORK STATE DEPARTMENT OF ENVIRONMENTAL CONSERVATION (NYSDEC).

13) ENCROACHMENTS ARE PRESENT ON SUBJECT PARCEL AND ARE AS SHOWN AS FIELD LOCATED.

LEGEND

- IRON ROD FOUND
- POWER/UTILITY POLE
- IRON PIPE FOUND
- HYDRANT
- WATER VALVE
- WETLAND FLAG
- CATV BOX
- TEL BOX
- PROPERTY LINE
- 500 EXISTING CONTOUR
- OVERHEAD UTILITY LINE
- EASEMENT
- WETLAND AREA
- WETLAND IMPACT AREA

WATERS OF THE UNITED STATES

WETLAND TABLE:

WETLAND A1 AREA:	1.51± ACRES
WETLAND A2 AREA:	3.74± ACRES
WETLAND B AREA:	0.28± ACRES
WETLAND C AREA:	0.23± ACRES
WETLAND D AREA:	0.06± ACRES
WETLAND E AREA:	1.11± ACRES
WETLAND F,H AREA:	1.87± ACRES
WETLAND G AREA:	2.05± ACRES
WETLAND I,J,S1 AREA:	1.74± ACRES
TOTAL WETLAND AREA:	12.59 ACRES

IMPACTS TO WATERS OF THE UNITED STATES

WETLAND CROSSING A:	0.047± ACRES
WETLAND CROSSING B:	0.028± ACRES
WETLAND CROSSING C:	0.051± ACRES
WETLAND CROSSING D:	0.031± ACRES
WETLAND CROSSING E:	0.004± ACRES
WETLAND CROSSING F:	0.021± ACRES
IMPACT TOTAL:	0.183± ACRES

NO.	DATE:	REVISIONS	BY:
2	01/25/22	BUILDING SETBACK LINES, UTILITY EASEMENTS	RDF
1	11/24/21	WETLAND AND IMPACT LABELS	PJY

UNAUTHORIZED ALTERATION OR ADDITION TO THIS DRAWING IS A VIOLATION OF SECTION 7209 SUBDIVISION 2, OF THE NEW YORK STATE EDUCATION LAW. ONLY COPIES MADE FROM THE ORIGINAL OF THIS DRAWING BEARING AN ORIGINAL INKED OR EMBOSSED SEAL AND SIGNATURE SHALL BE CONSIDERED TO BE VALID TRUE COPIES.

© Copyright 2022 – Ingalls & Associates, LLP – All rights reserved

STATE OF NEW YORK JOHN J. POST JR. 050643 LICENSED LAND SURVEYOR

JOHN J. POST, JR., L.S.
N.Y.S. LIC. NO. 050643

ingalls
ingalls & associates, LLP
engineering, environmental, surveying
2603 GUILDERLAND AVENUE
SCHENECTADY, N.Y. 12306
PHONE: (518) 393-7725
FAX: (518) 393-2324

SUBDIVISION PLAT OF
LANDS N/F CLDZ, LLC
UPPER MANNIX ROAD & THOMPSON HILL ROAD
TOWN OF EAST GREENBUSH
COUNTY OF RENSSELAER STATE OF NEW YORK

DATE: SEPTEMBER 9, 2021
CHECKED BY: JJP
JOB NO. 18-093
SCALE: 1"=50'
DRAWN BY: VCD
CADD FILE: 18-093 SUBDIVISION
SHEET P-1

MATCH LINE SHEET 3

MATCH LINE SHEET 2

MATCH LINE SHEET 1

WETLAND CONTINUES OFFSITE

WETLAND "D"

WETLAND "F,H"

WETLAND "G"

WETLAND "A1"

WETLAND "E"

WETLAND "I,J,S1"

LANDS N/F THOMPSON HILL, LLC. (L. 7929/P. 272) S.B.L. 144.-4-41.12

TREE W/WIRE

N84°08'05"E 1611.80'

N84°08'05"E 636.80'

SEE NOTE 7

ELECTRIC HORSE/FENCE (ENCROACHES)

OPEN SPACE 5
AREA: 12.54± ACRES

LANDS N/F
CLDZ, LLC.
(L. 8903/P. 96)
S.B.L. 145.-1-21
AREA: 74.85± AC.

STORMWATER 4
AREA: 1.56± ACRES

OPEN SPACE 6
AREA: 1.11± ACRES

OPEN SPACE 7
AREA: 8,980± SQ. FT.

PROPOSED WETLAND IMPACT = 1,370 S.F. WETLAND CROSSING D

BARN

N87°44'46"W 203.81'

ROAD 1 (50 FT. R.O.W.)

S02°51'14"W 348.83'

UTILITY EASEMENT TO THE TOWN OF EAST GREENUSH

LANDS N/F
GREGORY MULDERRY & MELISSA FERRARO
(L. 171/P. 269)
S.B.L 145.-1-20

C-1 12,114± SQ. FT.

C-2 15,465± SQ. FT.

C-3 12,726± SQ. FT.

C-4 9,772± SQ. FT.

C-5 25,252± SQ. FT.

C-6 27,453± SQ. FT.

C-36 14,066± SQ. FT.

C-36 19,835± SQ. FT.

T-1 10,931± SQ. FT.

T-2 12,606± SQ. FT.

T-3 10,414± SQ. FT.

T-4 13,101± SQ. FT.

T-5 12,258± SQ. FT.

T-6 10,711± SQ. FT.

T-7 9,897± SQ. FT.

T-8 9,743± SQ. FT.

T-9 11,045± SQ. FT.

T-10 12,340± SQ. FT.

T-11 15,720± SQ. FT.

T-12 20,427± SQ. FT.

T-13 12,286± SQ. FT.

T-14 11,448± SQ. FT.

T-15 9,666± SQ. FT.

T-16 9,583± SQ. FT.

T-17 8,773± SQ. FT.

T-18 8,703± SQ. FT.

T-19 7,894± SQ. FT.

T-20 9,672± SQ. FT.

T-21 8,403± SQ. FT.

T-22 9,266± SQ. FT.

T-23 9,974± SQ. FT.

E-1 30,829± SQ. FT.

E-2 26,505± SQ. FT.

E-3 28,325± SQ. FT.

E-4 26,560± SQ. FT.

E-5 14,808± SQ. FT.

E-6 13,209± SQ. FT.

E-7 15,498± SQ. FT.

E-8 11,840± SQ. FT.

E-9 21,564± SQ. FT.

PROPOSED WETLAND IMPACT = 0.029± AC. WETLAND CROSSING F

PROPOSED WETLAND IMPACT = 160 S.F. WETLAND CROSSING E

PROPOSED WETLAND IMPACT = 2,050 S.F.. WETLAND CROSSING A

PROPOSED WETLAND IMPACT = 1,200± S.F. WETLAND CROSSING B

PROPOSED WETLAND IMPACT = 2,240 S.F. WETLAND CROSSING C

ROAD 2 (50 FT. R.O.W.)

DRIVEWAY TO BRIDGE WETLANDS

DRIVEWAY TO BRIDGE WETLANDS

20' WIDE UTILITY EASEMENT TO THE TOWN OF EAST GREENUSH

20' WIDE UTILITY EASEMENT TO THE TOWN OF EAST GREENUSH

20' WIDE UTILITY EASEMENT TO THE TOWN OF EAST GREENUSH

STORMWATER 3
AREA: 1.21± ACRES

STORMWATER 2
AREA: 1.11± ACRES

STORMWATER 1
AREA: 20,846± SQ. FT.

OPEN SPACE 3
AREA: 6.37± ACRES

OPEN SPACE 2
AREA: 3.43± ACRES

OPEN SPACE 1
AREA: 16,009± SQ. FT.

LANDS N/F
CLDZ, LLC
(L. 8903/P. 96)
(L. 9390/P. 360)
S.B.L. 155.-5-4
AREA: 15.15± AC.

LANDS N/F
CHABAD OF SOUTHERN RENSSELAER COUNTY
(L. 8906/P. 229)
S.B.L 155.-5-6

LANDS N/F
WILLIAM & THERESE COONS
(L. 1243/P. 686)
S.B.L 155.-5-5

LANDS N/F
BERNETA M. REED
AND PAUL E. REED
L. 7188/P. 267

LANDS N/F
BRIAN C. GOODMAN &
TRACY M. SANTORE
(L. 6841/P. 262)
S.B.L 156.-1-2.2

LANDS N/F
LAWRENCE MAXWELL
(L. 205/P. 173)
S.B.L 156.-1-2.11

LANDS N/F
BRIAN & LISA BAIRD
(L. 6595/P. 150)
S.B.L. 156.-1-1.2

LANDS N/F
GREGORY MULDERRY &
MELISSA FERRARO
(L. 171/P. 288)
S.B.L 145.-1-19

CISTERN

EXISTING BUILDINGS

WELL

OVERHEAD WIRES

PAVEMENT EDGE

UPPER MANNIX ROAD

S88°19'59"W 74.90'

S84°41'13"W 300.28'

S84°43'54"W 581.39'

N85°17'32"E 303.85'

S87°27'42"W 297.86'

N89°04'12"W 220.02'

1030.28' TOTAL

295.95'

734.33'

757.14'

159.40'

GRAPHIC SCALE

150 0 75 150 300 600

(IN FEET)
1 inch = 150 ft.

NO.	DATE:	REVISIONS	BY:
2	01/25/22	BUILDING SETBACK LINES, UTILITY EASEMENTS	RDF
1	11/24/21	WETLAND AND IMPACT LABELS	PJY

UNAUTHORIZED ALTERATION OR ADDITION TO THIS DRAWING IS A VIOLATION OF SECTION 7209 SUBDIVISION 2, OF THE NEW YORK STATE EDUCATION LAW. ONLY COPIES MADE FROM THE ORIGINAL OF THIS DRAWING BEARING AN ORIGINAL INKED OR EMBOSSED SEAL AND SIGNATURE SHALL BE CONSIDERED TO BE VALID TRUE COPIES.

© Copyright 2022 – Ingalls & Associates, LLP – All rights reserved

STATE OF NEW YORK
JOHN J. PORTER
LICENSED LAND SURVEYOR
049643

JOHN J. POST, JR., L.S.
N.Y.S. LIC. NO. 050643

ingalls
ingalls & associates, LLP
engineering, environmental, surveying
2603 GUILDERLAND AVENUE
SCHENECTADY, N.Y. 12306
PHONE: (518) 393-7725
FAX: (518) 393-2324

SUBDIVISION PLAT OF
LANDS N/F CLDZ, LLC
UPPER MANNIX ROAD & THOMPSON HILL ROAD
TOWN OF EAST GREENBUSH
COUNTY OF RENSSELAER STATE OF NEW YORK

DATE: SEPTEMBER 9, 2021
CHECKED BY: JJP
JOB NO. 18-093
SCALE: 1"=50'
DRAWN BY: VCD
CADD FILE: 18-093 SUBDIVISION
SHEET P-2

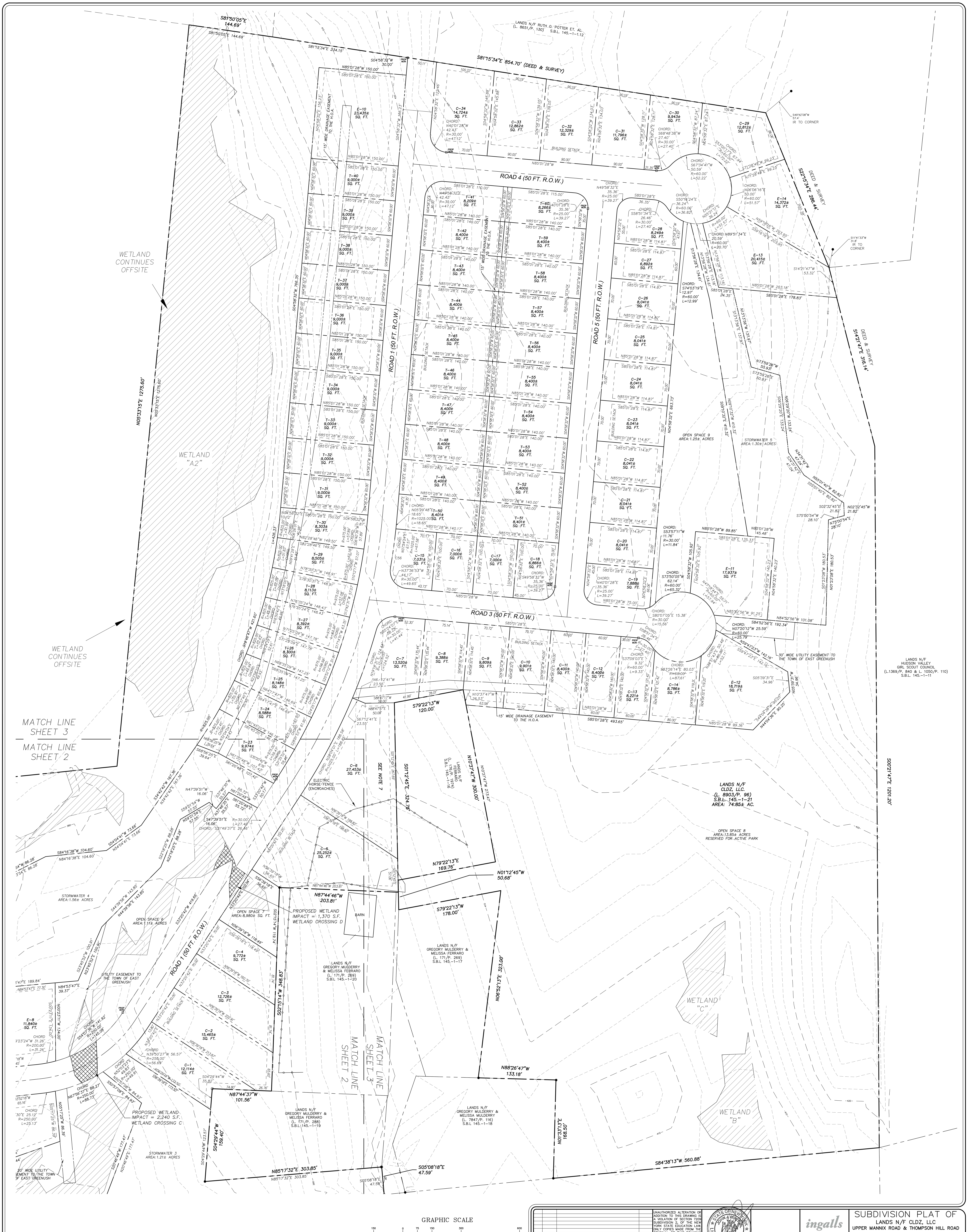

NO.	DATE:	REVISIONS	BY:
2	01/25/22	BUILDING SETBACK LINES, UTILITY EASEMENTS	RDF
1	11/24/21	WETLAND AND IMPACT LABELS	PJY

UNAUTHORIZED ALTERATION OR ADDITION TO THIS DRAWING IS A VIOLATION OF SECTION 7209 SUBDIVISION 2, OF THE NEW YORK STATE EDUCATION LAW. ONLY COPIES MADE FROM THE ORIGINAL OF THIS DRAWING BEARING AN ORIGINAL INKED OR EMBOSSED SEAL AND SIGNATURE SHALL BE CONSIDERED TO BE VALID TRUE COPIES.

© Copyright 2022 – Ingalls & Associates, LLP – All rights reserved

STATE OF NEW YORK · JOHN J. POST JR. · NO. 050643 · LICENSED LAND SURVEYOR

JOHN J. POST, JR., L.S.
N.Y.S. LIC. NO. 050643

ingalls
ingalls & associates, LLP
engineering, environmental, surveying
2603 GUILDERLAND AVENUE
SCHENECTADY, N.Y. 12306
PHONE: (518) 393-7725
FAX: (518) 393-2324

SUBDIVISION PLAT OF

LANDS N/F CLDZ, LLC
UPPER MANNIX ROAD & THOMPSON HILL ROAD
TOWN OF EAST GREENBUSH
COUNTY OF RENSSELAER STATE OF NEW YORK

DATE: SEPTEMBER 9, 2021
CHECKED BY: JJP
JOB NO. 18-093
SCALE: 1"=50'
DRAWN BY: VCD
CADD FILE: 18-093 SUBDIVISION
SHEET P-3

LEGEND

PROPERTY LINE

C– PROPOSED COTTAGE LOT

D– PROPOSED DUPLEX LOT

E– PROPOSED ESTATE LOT

LANDSCAPING NOTE:
EACH BUILDING LOT SHALL HAVE NEW STREET TREE AS PART OF THE BUILDERS LANDSCAPE PACKAGE. THE STREET TREES SHALL BE PLANTED ALONG THE ROW LINE. STREET TREES SHALL A NYSDEC APPROVED LARGE DECIDUOUS TREE.

WETLAND NOTES:
ON ALL LOTS THAT CONTAIN WETLANDS OR WETLANDS AREA LESS THAN 50' FROM THE PROPERTY BOUNDARY SIGNAGE SHALL BE PLACED AT A MAXIMUM SPACING OF 200' APART IDENTIFYING THE WETLAND AREA

WETLAND BUFFER PLANTINGS SHALL BE PLACED ON LOTS T-13 THROUGH T-22 WHERE THE WETLAND BOUNDARIES ENCROACH WITHIN THE BUILDING PARCELS THE PLANTINGS SHALL BE COORDINATED WITH THE CONSERVATION ADVISORY COUNCIL

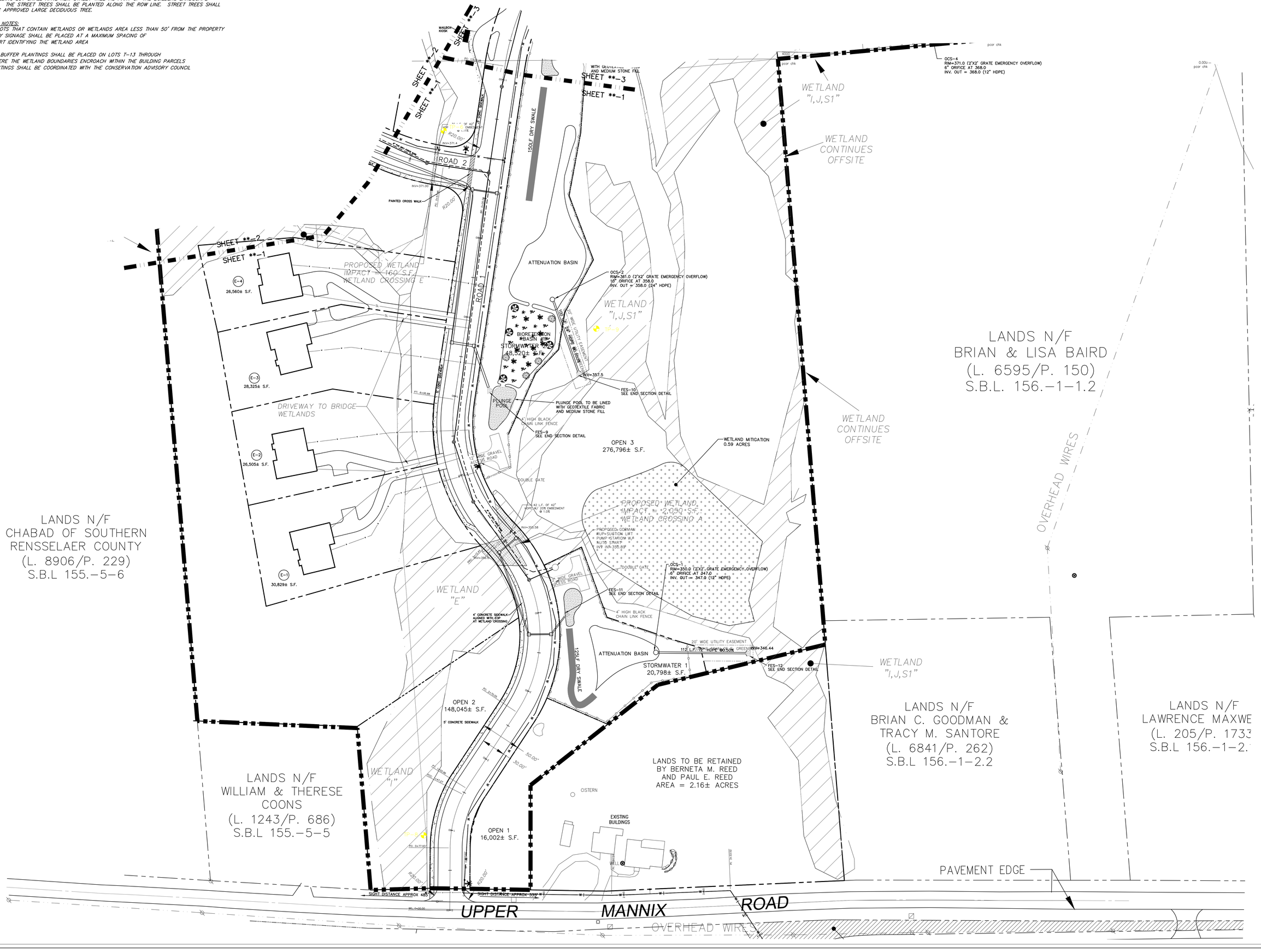

NOTE: 48 HOURS PRIOR TO ANY CONSTRUCTION ACTIVITIES, THE CONTRACTOR SHALL CONTACT THE U.F.P.O. TO LOCATE ALL UNDERGROUND UTILITIES. 1-800-962-7962

NO.	DATE	REVISIONS	BY
3	07/25/22	REVISED AS PER TDE AND E. GREENBUSH COMMENTS	
2	11/03/21	REVISED AS PER CAC AND USACOE COMMENTS	
1	7/27/21	REVISED AS PER TDE COMMENTS DATED 7/8/21	

BRETT L. STEENBURGH, P.E.
N.Y.S. LIC. NO. 075458

APPLICANT:
CLDZ LLC
494 WESTERN TURNPIKE
ALTAMONT, NY 12009

BRETT L. STEENBURGH, P.E. PLLC
2832 Rosendale Road
Niskayuna, NY 12309
(518) 365-0675
bsteenburghpe@gmail.com
ENGINEERING THAT TRANSFORMS IMAGINATION INTO REALITY
A comprehensive civil engineering firm with a personal touch

OVERALL PLAN
CLDZ, LLC
CARVER COURT
TOWN OF EAST GREENBUSH
COUNTY OF RENSSELAER STATE OF NEW YORK

DRAWN BY: BLS
CADD FILE:
DATE: FEBRUARY 15, 2021
CHECKED BY: JOB NO.
SCALE: 1" = 100'
SHEET SP-1

LEGEND

PROPERTY LINE

(C–) PROPOSED COTTAGE LOT

(D–) PROPOSED DUPLEX LOT

(E–) PROPOSED ESTATE LOT

LANDSCAPING NOTE:
EACH BUILDING LOT SHALL HAVE ONE STREET TREE AS PART OF THE BUILDERS LANDSCAPE PACKAGE. THE STREET TREES SHALL BE PLANTED ALONG THE ROW LINE. STREET TREE'S SHALL A NYSDEC APPROVED LARGE DECIDUOUS TREE.

WETLAND NOTES:
ON ALL LOTS THAT CONTAIN WETLANDS OR WETLANDS AREA LESS THAN 50' FROM THE PROPERTY BOUNDARY SIGNAGE SHALL BE PLACED AT A MAXIMUM SPACING OF 200' APART IDENTIFYING THE WETLAND AREA

WETLAND BUFFER PLANTINGS SHALL BE PLACED ON LOTS T–13 THROUGH T–22 WHERE THE WETLAND BOUNDARIES ENCROACH WITHIN THE BUILDING PARCELS THE PLANTINGS SHALL BE COORDINATED WITH THE CONSERVATION ADVISORY COUNCIL

THOMPSON HILL ROAD

PAVEMENT EDGE

OVERHEAD WIRES

EXISTING 8" PVC GRAVITY SEWER

EXISTING 8" DIP WATER MAIN

EXISTING 6" PVC DRY FORCE MAIN

8" PVC INVERT OUT: 416.40' LPSS INV. IN = 417.00

30" DUCTILE WATER MAIN

SIGHT DISTANCE APPROX 350'

EXISTING 20' WATER MAIN

R10.00'

EXISTING SMITH LANE UTILIZED AS PAEDELT DRIVEWAY TO BE RE–CONSTRUCTED TO 20' WIDE EMERGENCY ACCESS SEE INSET ON OVERALL PLAN

250' GRASS BLOCK PAVER ROAD 20' WIDE

SHED (ENCROACHES)

20' WIDE CRASH GATE

WALKWAY (ENCROACHES)

HOUSE

GARDEN (ENCROACHES)

POOL & POOL DECK (ENCROACHES)

SHED (ENCROACHES)

SHED (ENCROACHES)

INGRESS EGRESS EASEMENT
L. 4472 P. 77
SEE NOTE 5

UTILITY EASEMENT TO
NEW YORK TELEPHONE COMPANY
L. 890 P. 445
SEE NOTE 6

WETLAND CONTINUES OFFSITE

OPEN 4
386,781± S.F.

WETLAND "G"

WETLAND "F,H"

WETLAND "H"

WETLAND CONTINUES OFFSITE

PROPOSED WETLAND IMPACT = 900± S.F. WETLAND CROSSING F

INV=374.24

INV=374.9

24 L.F. OF 30" HDPE @1.0%

ASPHALT APRON WITHIN ROW

180' GRASS BLOCK PAVER ROAD 20' WIDE

20' WIDE CRASH GATE

STREET AND ACCESS EASEMENT TO BE CONSTRUCTED

ROAD 2

TREE W/WIRE

TREE W/WIRE

C–20 14,074± S.F.

C–21 19,826± S.F.

T–12 20,553± S.F.

T–11 15,594± S.F.

T–13 12,302± S.F.

T–14 11,465± S.F.

T–10 12,431± S.F.

T–9 11,308± S.F.

T–15 9,613± S.F.

T–16 9,634± S.F.

T–17 8,724± S.F.

T–18 8,752± S.F.

T–8 9,827± S.F.

T–7 9,812± S.F.

T–19 7,894± S.F.

T–20 9,672± S.F.

T–6 10,710± S.F.

T–5 12,259± S.F.

T–21 8,403± S.F.

T–22 9,265± S.F.

T–4 12,983± S.F.

T–3 10,533± S.F.

T–2 12,605± S.F.

T–1 10,931± S.F.

MAILBOX KIOSK

SHEET **–3

SHEET **–2

SHEET **–1

R60.00'

R220.00'

R160.00'

R10.00'

R50.00'

30.00'

NOTE: 48 HOURS PRIOR TO ANY CONSTRUCTION ACTIVITIES, THE CONTRACTOR SHALL CONTACT THE LITTLE E.D.G. TO LOCATE ALL UNDERGROUND UTILITIES. 1–800–962–7962

BY:	DESCRIPTION
3	11/22/21 REVISED AS PER TDE AND C.E.P.B/PLANNING COMMENTS
2	11/15/21 REVISED AS PER TDE COMMENTS DATED 7/8/21
1	7/07/21 REVISED AS PER TDE COMMENTS DATED 7/8/21

BRETT L. STEENBURGH, P.E.
N.Y.S. LIC. NO. 075458

BRETT L. STEENBURGH, P.E. PLLC
2832 Rosendale Road
Niskayuna, NY 12309
(518) 365–9275
blsteenburgh@gmail.com
ENGINEERING THAT TRANSFORMS IMAGINATION INTO REALITY
A comprehensive civil engineering firm

APPLICANT:
CLDZ LLC
494 WESTERN TURNPIKE
ALTAMONT, NY 12009

SITE PLAN
CLDZ, LLC
CARVER COURT
TOWN OF EAST GREENBUSH
COUNTY OF RENSSELAER STATE OF NEW YORK

DRAWN BY:	BLS	JOB NO.	SCALE: 1" = 40'
CADD FILE:			SHEET SP–2
DATE:	FEBRUARY 15, 2021		

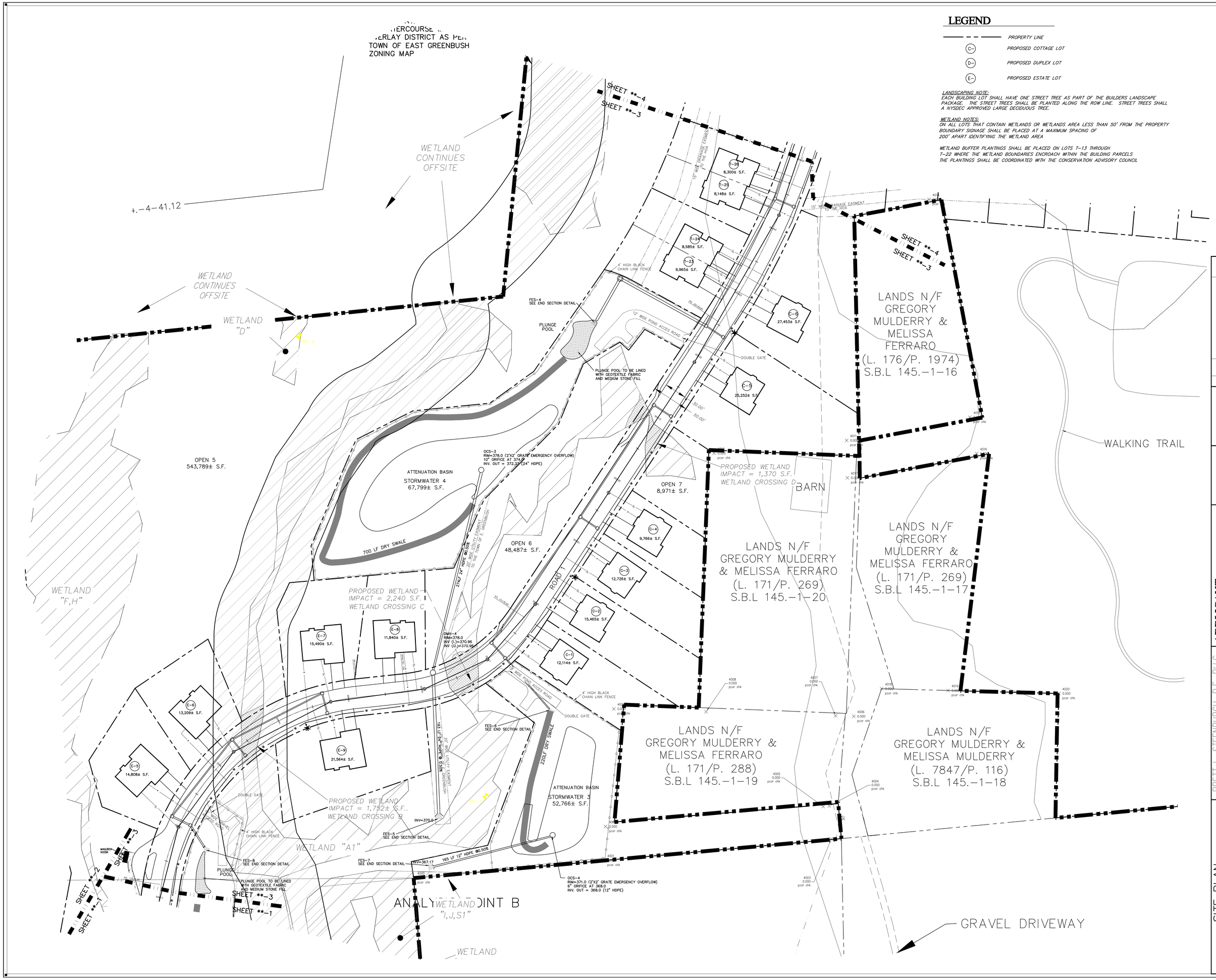

LEGEND

- PROPERTY LINE
- (C-) PROPOSED COTTAGE LOT
- (D-) PROPOSED DUPLEX LOT
- (E-) PROPOSED ESTATE LOT

LANDSCAPING NOTE:
EACH BUILDING LOT SHALL HAVE ONE STREET TREE AS PART OF THE BUILDERS LANDSCAPE PACKAGE. THE STREET TREES SHALL BE PLANTED ALONG THE ROW LINE. STREET TREES SHALL A NYSDEC APPROVED LARGE DECIDUOUS TREE.

WETLAND NOTES:
ON ALL LOTS THAT CONTAIN WETLANDS OR WETLANDS AREA LESS THAN 50' FROM THE PROPERTY BOUNDARY SIGNAGE SHALL BE PLACED AT A MAXIMUM SPACING OF 200' APART IDENTIFYING THE WETLAND AREA

WETLAND BUFFER PLANTINGS SHALL BE PLACED ON LOTS T-13 THROUGH T-22 WHERE THE WETLAND BOUNDARIES ENCROACH WITHIN THE BUILDING PARCELS THE PLANTINGS SHALL BE COORDINATED WITH THE CONSERVATION ADVISORY COUNCIL

NOTE: 48 HOURS PRIOR TO ANY CONSTRUCTION ACTIVITIES, THE CONTRACTOR SHALL CONTACT THE U.F.P.O. TO LOCATE ALL UNDERGROUND UTILITIES. 1-800-962-7962

NO.	DATE	REVISIONS	BY
2	11/03/21	REVISED AS PER CAC AND USACOE COMMENTS	
1	7/27/21	REVISED AS PER TOE COMMENTS DATED 7/8/21	

BRETT L. STEENBURGH, P.E.
N.Y.S. LIC. NO. 075458

APPLICANT:
CLDZ LLC
494 WESTERN TURNPIKE
ALTAMONT, NY 12009

BRETT L. STEENBURGH, P.E. PLLC
2832 Rosendale Road
Niskayuna, NY 12309
(518) 365-0675
bsteenburghpe@gmail.com
ENGINEERING THAT TRANSFORMS IMAGINATION INTO REALITY
A comprehensive civil engineering firm with a personal touch

SITE PLAN
CLDZ, LLC
CARVER COURT
TOWN OF EAST GREENBUSH
COUNTY OF RENSSELAER STATE OF NEW YORK

DRAWN BY: BLS	CHECKED BY: JOB NO.	SCALE: 1" = 40'	
CADD FILE:		SHEET SP-3	
DATE: FEBRUARY 15, 2021			

LANDS N/F
RUTH O. POTTER ET. AL.
(L. 8651/P. 130)
S.B.L. 145.-1-1.12

LEGEND

- PROPERTY LINE
- (C-) PROPOSED COTTAGE LOT
- (D-) PROPOSED DUPLEX LOT
- (E-) PROPOSED ESTATE LOT

LANDSCAPING NOTE:
EACH BUILDING LOT SHALL HAVE ONE STREET TREE AS PART OF THE BUILDERS LANDSCAPE PACKAGE. THE STREET TREES SHALL BE PLANTED ALONG THE ROW LINE. STREET TREES SHALL A NYSDEC APPROVED LARGE DECIDUOUS TREE.

WETLAND NOTES:
ON ALL LOTS THAT CONTAIN WETLANDS OR WETLANDS AREA LESS THAN 50' FROM THE PROPERTY BOUNDARY SIGNAGE SHALL BE PLACED AT A MAXIMUM SPACING OF 200' APART IDENTIFYING THE WETLAND AREA

WETLAND BUFFER PLANTINGS SHALL BE PLACED ON LOTS T-13 THROUGH T-22 WHERE THE WETLAND BOUNDARIES ENCROACH WITHIN THE BUILDING PARCELS THE PLANTINGS SHALL BE COORDINATED WITH THE CONSERVATION ADVISORY COUNCIL

WETLAND CONTINUES OFFSITE

WETLAND "A2"

IR TO CORNER

IR TO CORNER

S49°42'08"W 57.4'

S11°41'33"W 31.8'

ROAD 1 (PVT. R.O.W.)

ROAD 2 (PVT. R.O.W.)

ROAD 3 (PVT. R.O.W.)

ROAD 4 (PVT. R.O.W.)

ROAD 5 (PVT. R.O.W.)

C-10	23,435± S.F.	
C-34	14,724± S.F.	
C-33	12,862± S.F.	
C-32	12,239± S.F.	
C-31	11,796± S.F.	
C-30	9,943± S.F.	
C-29	12,812± S.F.	
C-14	14,372± S.F.	
C-13	20,682± S.F.	
T-40	8,735± S.F.	
T-39	9,265± S.F.	
T-41	9,298± S.F.	
T-42	7,367± S.F.	
T-60	9,299 S.F.	
T-59	7,367 S.F.	
C-28	8,249± S.F.	
C-27	6,892± S.F.	
T-38	8,845± S.F.	
T-37	9,155± S.F.	
T-43	8,533± S.F.	
T-44	8,303± S.F.	
T-58	8,497 S.F.	
T-57	8,303 S.F.	
C-26	8,041± S.F.	
T-36	8,930± S.F.	
T-35	9,070± S.F.	
T-45	8,497± S.F.	
T-46	8,303± S.F.	
T-56	8,497 S.F.	
T-55	8,303 S.F.	
C-25	8,041± S.F.	
C-24	8,041± S.F.	
T-34	9,427± S.F.	
T-33	8,572± S.F.	
T-47	8,596± S.F.	
T-48	8,203± S.F.	
T-54	8,597 S.F.	
T-53	8,203 S.F.	
C-23	8,041± S.F.	
T-32	8,977± S.F.	
T-31	9,024± S.F.	
T-49	8,079± S.F.	
T-50	8,721± S.F.	
T-52	8,079 S.F.	
T-51	8,721 S.F.	
C-22	8,041± S.F.	
C-21	7,973± S.F.	
T-30	8,303± S.F.	
T-29	8,505± S.F.	
C-20	8,041± S.F.	
C-19	7,888± S.F.	
C-18	6,866 S.F.	
C-17	7,000± S.F.	
C-16	7,000± S.F.	
C-15	7,002± S.F.	
C-11	23,239± S.F.	
T-28	8,113± S.F.	
T-27	8,392± S.F.	
C-7	13,650± S.F.	
C-8	8,796± S.F.	
C-9	9,581± S.F.	
C-10	10,720± S.F.	
C-11	8,400± S.F.	
C-12	8,400± S.F.	
C-13	8,221± S.F.	
C-14	8,786± S.F.	
C-12	18,719± S.F.	

FES-1
SEE END SECTION DETAIL

PLUNGE POOL TO BE LINED WITH GEOTEXTILE FABRIC AND MEDIUM STONE FILL

140 LF DRY SWALE

WALKING TRAIL

STORMWATER 5
56,503± S.F.

OPEN 9
52,103± S.F.

OCS-4
RIM=416.5 (2'X2' GRATE EMERGENCY OVERFLOW)
10" ORIFICE AT 412.0
INV. OUT = 412.0 (12" HDPE)

ATTENUATION BASIN

62LF 24" HDPE @ 3.22%

INV.=410.0

FES-3
SEE END SECTION DETAIL

4' HIGH BLACK CHAIN LINK FENCE

PLUNGE POOL

PLUNGE POOL TO BE LINED WITH GEOTEXTILE FABRIC AND MEDIUM STONE FILL

12' WIDE GRAVEL ACCESS ROAD

DOUBLE GATE

FES-2
SEE END SECTION DETAIL

R60.00' 30' WIDE UTILITY EASEMENT TO THE TOWN OF E. GREENBUSH

15' WIDE DRAINAGE EASEMENT TO THE TOWN OF E. GREENBUSH

SHEET **-4
SHEET **-3

SHEET **-4
SHEET **-3

NOTE: 48 HOURS PRIOR TO ANY CONSTRUCTION ACTIVITIES, THE CONTRACTOR SHALL CONTACT DIG SAFELY.NEW YORK AT 811 OR CALL UNDERGROUND UTILITIES, 1-800-962-7962

NO.	DATE	DESCRIPTION	BY
3	01/03/21	REVISED AS PER TOE AND E. GREENBUSH COMMENTS	BLS
2	08/27/21	REVISED AS PER TOE COMMENTS DATED 7/8/21	BLS
1	7/07/21	REVISED AS PER TOE COMMENTS DATED 7/8/21	BLS

BRETT L. STEENBURGH, P.E.
N.Y.S. LIC. NO. 075458

BRETT L. STEENBURGH, P.E. PLLC
2832 Rosendale Road
Niskayuna, NY 12309
(518) 356-0613
steenburghpe@gmail.com
ENGINEERING THAT TRANSFORMS IMAGINATION INTO REALITY
With a personal touch

APPLICANT:
CLDZ LLC
494 WESTERN TURNPIKE
ALTAMONT, NY 12009

SITE PLAN
CLDZ, LLC
CARVER COURT
TOWN OF EAST GREENBUSH
COUNTY OF RENSSELAER STATE OF NEW YORK

DRAWN BY:	BLS	JOB NO.	SCALE: 1" = 40'
CADD FILE:			SHEET SP-4
DATE:	FEBRUARY 15, 2021		

LEGEND

- PROPERTY LINE
- PROPOSED STORM SEWER W/ CATCH BASIN
- PROPOSED LOW PRESSURE SANITARY SEWER W/ CLEANOUT
- PROPOSED WATER MAIN
- EXISTING CONTOUR
- PROPOSED CONTOUR

NOTE: 48 HOURS PRIOR TO ANY CONSTRUCTION ACTIVITIES, THE CONTRACTOR SHALL CONTACT THE U.F.P.O. TO LOCATE ALL UNDERGROUND UTILITIES. 1-800-962-7962

NO.	DATE	REVISIONS	BY
3	01/25/22	REVISED AS PER TDE AND E. GREENBUSH COMMENTS	
2	11/03/21	REVISED AS PER CAC AND USACOE COMMENTS	
1	7/27/21	REVISED AS PER TDE COMMENTS DATED 7/8/21	

BRETT L. STEENBURGH, P.E.
N.Y.S. LIC. NO. 075458

APPLICANT:
CLDZ LLC
494 WESTERN TURNPIKE
ALTAMONT, NY 12009

BRETT L. STEENBURGH, P.E. PLLC
2832 Rosendale Road
Niskayuna, NY 12309
(518) 365-0675
bsteenburghpe@gmail.com
ENGINEERING THAT TRANSFORMS IMAGINATION INTO REALITY
A comprehensive civil engineering firm with a personal touch

GRADING PLAN

CLDZ, LLC
CARVER COURT
TOWN OF EAST GREENBUSH
COUNTY OF RENSSELAER STATE OF NEW YORK

DRAWN BY: BLS
CADD FILE:
CHECKED BY: JOB NO.
DATE: FEBRUARY 15, 2021
SCALE: 1" = 40'
SHEET GP-1

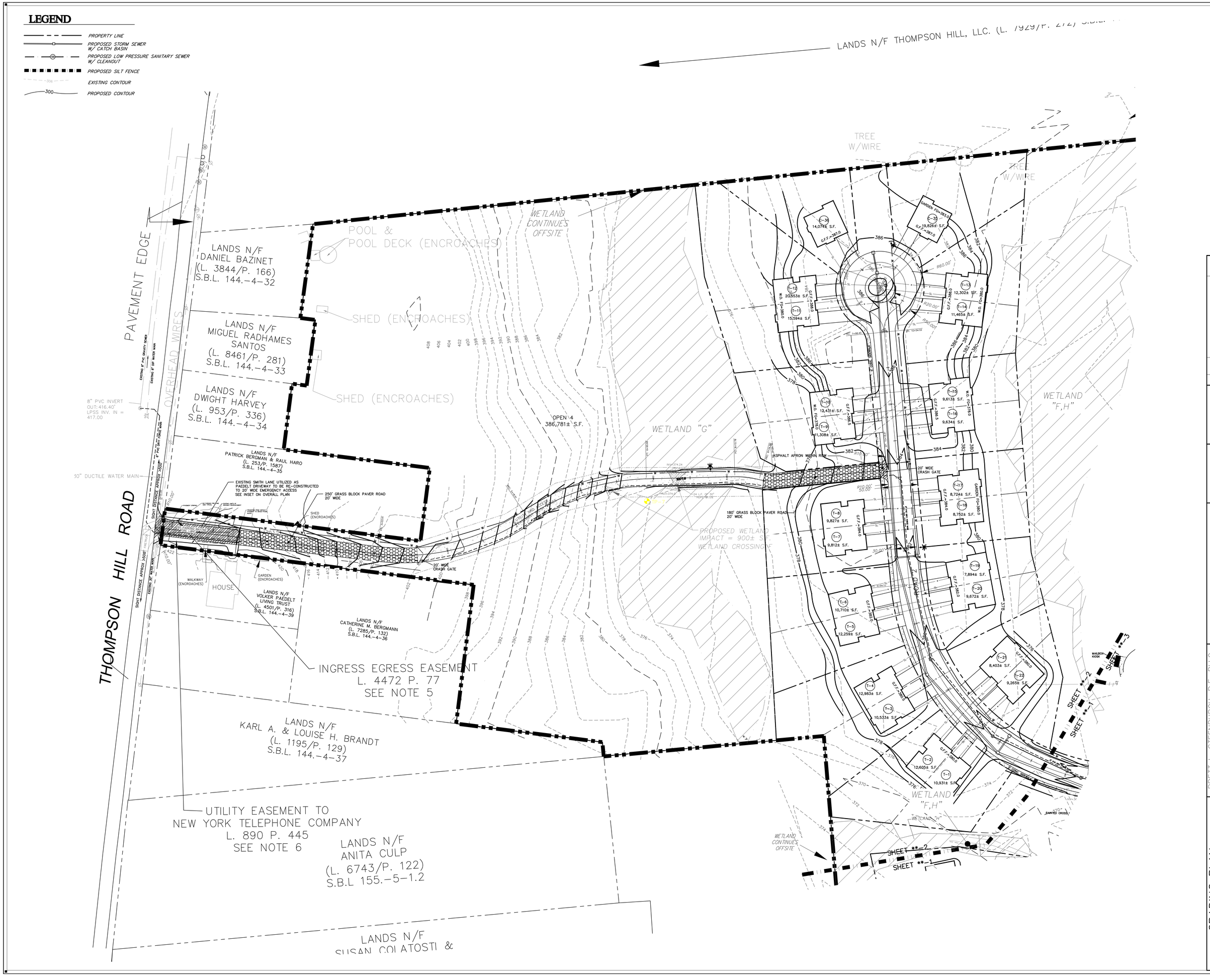

NOTE: 48 HOURS PRIOR TO ANY CONSTRUCTION ACTIVITIES, THE CONTRACTOR SHALL CONTACT THE U.F.P.O. TO LOCATE ALL UNDERGROUND UTILITIES. 1-800-962-7962

NO.	DATE	REVISIONS	BY
3	01/25/22	REVISED AS PER TDE AND E. GREENBUSH COMMENTS	
2	11/03/21	REVISED AS PER CAC AND USACOE COMMENTS	
1	7/27/21	REVISED AS PER TDE COMMENTS DATED 7/8/21	

BRETT L. STEENBURGH, P.E.
N.Y.S. LIC. NO. 075458

APPLICANT:
CLDZ LLC
494 WESTERN TURNPIKE
ALTAMONT, NY 12009

BRETT L. STEENBURGH, P.E. PLLC
2832 Rosendale Road
Niskayuna, NY 12309
(518) 365-0675
bsteenburghpe@gmail.com
ENGINEERING THAT TRANSFORMS IMAGINATION INTO REALITY
A comprehensive civil engineering firm with a personal touch

GRADING PLAN
CLDZ, LLC
CARVER COURT
TOWN OF EAST GREENBUSH
COUNTY OF RENSSELAER STATE OF NEW YORK

DRAWN BY: BLS
CADD FILE:
CHECKED BY: JOB NO.
DATE: FEBRUARY 15, 2021
SCALE: 1" = 40'
SHEET GP-2

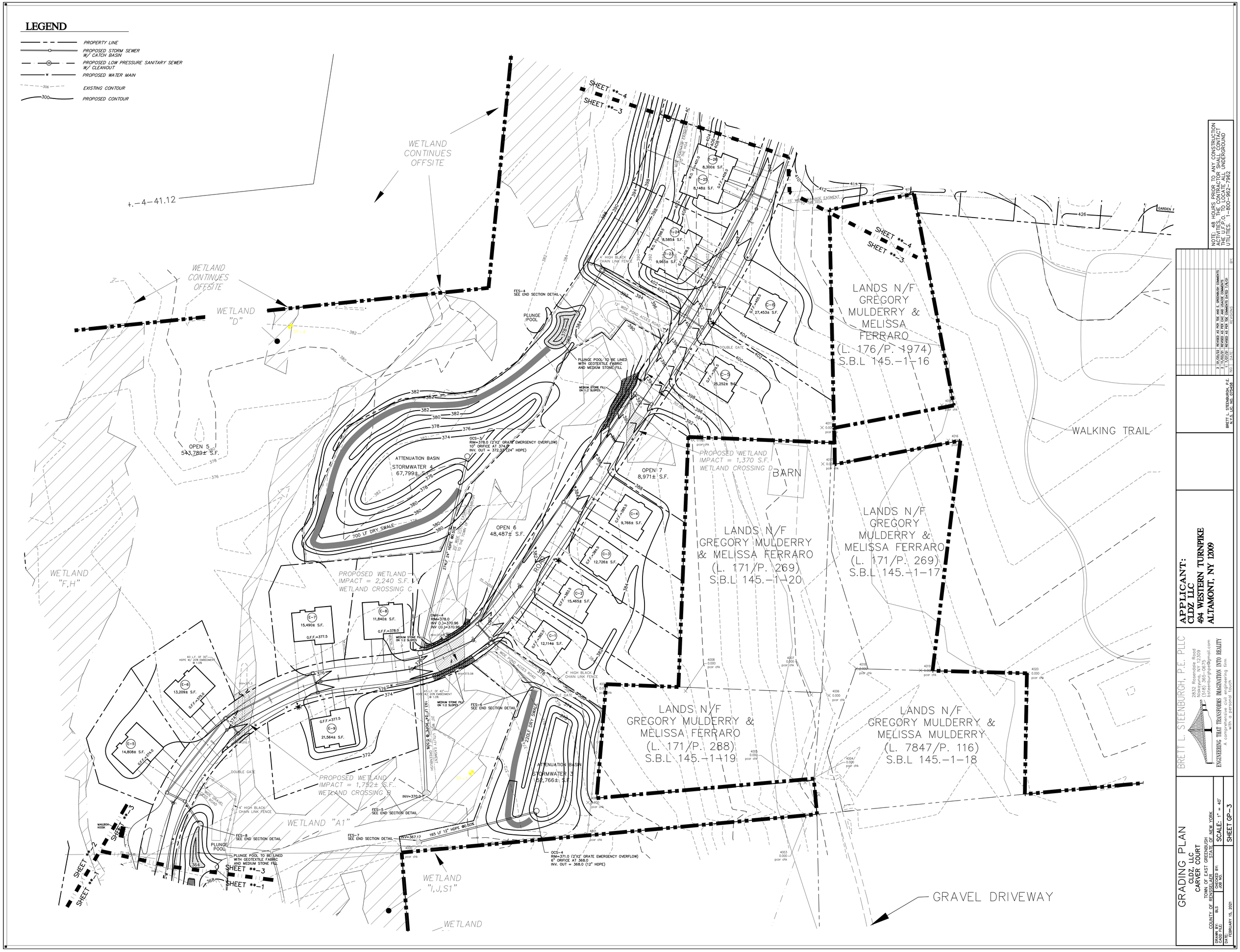
LEGEND
PROPERTY LINE
PROPOSED STORM SEWER W/ CATCH BASIN
PROPOSED LOW PRESSURE SANITARY SEWER W/ CLEANOUT
PROPOSED WATER MAIN
EXISTING CONTOUR
PROPOSED CONTOUR
WETLAND CONTINUES OFFSITE
WETLAND "D"
WETLAND "F,H"
WETLAND "A1"
WETLAND "I,J,S1"
WETLAND
SHEET **-4
SHEET **-3
SHEET **-2
SHEET **-1
LANDS N/F GREGORY MULDERRY & MELISSA FERRARO (L. 176/P. 1974) S.B.L 145.-1-16
LANDS N/F GREGORY MULDERRY & MELISSA FERRARO (L. 171/P. 269) S.B.L 145.-1-20
LANDS N/F GREGORY MULDERRY & MELISSA FERRARO (L. 171/P. 269) S.B.L 145.-1-17
LANDS N/F GREGORY MULDERRY & MELISSA FERRARO (L. 171/P. 288) S.B.L 145.-1-19
LANDS N/F GREGORY MULDERRY & MELISSA MULDERRY (L. 7847/P. 116) S.B.L 145.-1-18
WALKING TRAIL
GRAVEL DRIVEWAY
BARN
PROPOSED WETLAND IMPACT = 1,370 S.F. WETLAND CROSSING D
PROPOSED WETLAND IMPACT = 2,240 S.F. WETLAND CROSSING C
PROPOSED WETLAND IMPACT = 1,752± S.F. WETLAND CROSSING B
ATTENUATION BASIN STORMWATER 4 67,799± S.F.
ATTENUATION BASIN STORMWATER 3 52,766± S.F.
OPEN 5 543,789± S.F.
OPEN 6 48,487± S.F.
OPEN 7 8,971± S.F.
700 LF DRY SWALE
220LF DRY SWALE
PLUNGE POOL
PLUNGE POOL TO BE LINED WITH GEOTEXTILE FABRIC AND MEDIUM STONE FILL
FES-4 SEE END SECTION DETAIL
FES-5 SEE END SECTION DETAIL
FES-6 SEE END SECTION DETAIL
FES-7 SEE END SECTION DETAIL
FES-8 SEE END SECTION DETAIL
OCS-3 RIM=378.0 (2'X2' GRATE EMERGENCY OVERFLOW) 10" ORIFICE AT 374.0 INV. OUT = 372.33 (24" HDPE)
OCS-4 RIM=371.0 (2'X2' GRATE EMERGENCY OVERFLOW) 6" ORIFICE AT 368.0 INV. OUT = 368.0 (12" HDPE)
DMH-4 RIM=378.0 INV (L)=370.96 INV (O.)=370.96
MEDIUM STONE FILL ON 1:2 SLOPES
4' HIGH BLACK CHAIN LINK FENCE
DOUBLE GATE
12' WIDE POND ACCESS ROAD
15' WIDE DRAINAGE EASEMENT TO THE HOA
GARDEN
NOTE: 48 HOURS PRIOR TO ANY CONSTRUCTION ACTIVITIES, THE CONTRACTOR SHALL CONTACT THE U.F.P.O. TO LOCATE ALL UNDERGROUND UTILITIES. 1-800-962-7962
APPLICANT: CLDZ LLC 494 WESTERN TURNPIKE ALTAMONT, NY 12009
BRETT L. STEENBURGH, P.E. PLLC
2832 Rosendale Road Niskayuna, NY 12309 (518) 365-0675 bsteenburghpe@gmail.com
ENGINEERING THAT TRANSFORMS IMAGINATION INTO REALITY
A comprehensive civil engineering firm with a personal touch
GRADING PLAN
CLDZ, LLC
CARVER COURT
TOWN OF EAST GREENBUSH
COUNTY OF RENSSELAER STATE OF NEW YORK
DRAWN BY: BLS
CHECKED BY: JOB NO.
CADD FILE:
DATE: FEBRUARY 15, 2021
SCALE: 1" = 40'
SHEET GP-3

LEGEND

- PROPERTY LINE
- PROPOSED STORM SEWER W/ CATCH BASIN
- PROPOSED LOW PRESSURE SANITARY SEWER W/ CLEANOUT
- PROPOSED WATER MAIN
- 306 EXISTING CONTOUR
- 300 PROPOSED CONTOUR

LANDS N/F
RUTH O. POTTER ET. AL.
(L. 8651/P. 130)
S.B.L. 145.-1-1.12

WETLAND CONTINUES OFFSITE

WETLAND "A2"

IR TO CORNER

IR TO CORNER

S49°42'08"W 57.4'

S11°41'33"W 31.8'

ROAD 4

ROAD 5

ROAD 3

ROAD 2

WALKING TRAIL

ANALYSIS POINT

GII
(L.1369/F

C-34 14,724± S.F. G.F.F.=428.0
C-33 12,862± S.F. G.F.F.=432.0
C-32 12,239± S.F. G.F.F.=434.0
C-31 11,796± S.F. G.F.F.=433.0
C-30 9,943± S.F. G.F.F.=431.0
C-29 12,812± S.F. G.F.F.=429.5
C-16 14,372± S.F. G.F.F.=429.5
C-15 20,682± S.F. G.F.F.=429.5
C-14 23,239± S.F. G.F.F.=423.5
C-13 23,435± S.F. G.F.F.=423.5
C-40 8,935± S.F.
C-39 9,265± S.F.
C-41 9,298± S.F. G.F.F.=423.75
C-42 7,367± S.F.
C-60 9,299 S.F. W.O. FG=426.5 G.F.F.=434.5
C-59 7,367 S.F.
C-28 8,249± S.F. G.F.F.=434.5
C-27 6,892± S.F. G.F.F.=434.0
C-58 8,497 S.F. W.O. FG=427.5 G.F.F.=435.5
C-57 8,303 S.F.
C-26 8,041± S.F. G.F.F.=435.5
C-25 8,041± S.F. G.F.F.=434.0
C-24 8,041± S.F. G.F.F.=433.5
C-23 8,041± S.F. G.F.F.=433.0
C-22 8,041± S.F. G.F.F.=432.0
C-21 7,973± S.F. G.F.F.=431.5
C-20 8,041± S.F. G.F.F.=430.0
C-19 7,888± S.F. G.F.F.=429.5
C-43 8,533± S.F.
C-44 8,303± S.F.
C-45 8,497± S.F. G.F.F.=420.75
C-46 8,303± S.F.
C-47 8,596± S.F. G.F.F.=418.0
C-48 8,203± S.F.
C-49 8,079± S.F. G.F.F.=416.0
C-50 8,721± S.F.
C-51 8,079 S.F. W.O. FG=423.5 G.F.F.=431.5
C-52 8,721 S.F.
C-53 8,203 S.F. W.O. FG=423.0 G.F.F.=433.0
C-54 8,597 S.F.
C-55 8,303 S.F. W.O. FG=425.5 G.F.F.=433.5
C-56 8,497 S.F.
C-57 8,303 S.F.
C-58 8,497 S.F. W.O. FG=427.5 G.F.F.=435.5
C-59 7,367 S.F.
C-60 9,299 S.F. W.O. FG=426.5 G.F.F.=434.5
C-37 9,155± S.F. G.F.F.=421.5
C-38 8,845± S.F. W.O. FG=413.5
C-35 9,070± S.F. G.F.F.=419.0
C-36 8,930± S.F. W.O. FG=411.0
C-33 8,572± S.F.
C-34 9,427± S.F. W.O. FG=409.5 G.F.F.=417.5
C-31 9,024± S.F. W.O. FG=407.5
C-32 8,977± S.F. G.F.F.=415.5
C-29 8,505± S.F.
C-30 8,303± S.F. W.O. FG=405.5 G.F.F.=413.5
C-27 8,392± S.F.
C-28 8,113± S.F. W.O. FG=403.5 G.F.F.=411.25
C-7 13,650± S.F. G.F.F.=415.0
C-8 8,796± S.F. G.F.F.=419.5 GARDEN FG=415.5
C-9 9,581± S.F. G.F.F.=422.5 GARDEN FG=418.5
C-10 10,720± S.F. G.F.F.=426.5 GARDEN FG=422.5
C-11 8,400± S.F. G.F.F.=429.2 GARDEN FG=425.5
C-12 8,400± S.F. G.F.F.=430.0 GARDEN FG=426.0
C-13 8,221± S.F. G.F.F.=429.5 GARDEN FG=425.5
C-14 8,786± S.F. G.F.F.=427.5 GARDEN FG=423.5
C-15 18,719± S.F. W.O. FG=419.0 G.F.F.=427.0
C-17 7,000± S.F. G.F.F.=424.0
C-18 6,866 S.F. G.F.F.=428.0
C-19 7,002± S.F. G.F.F.=416.0
C-20 8,041± S.F. G.F.F.=428.5
C-21 7,973± S.F. G.F.F.=431.5
C-22 8,041± S.F. G.F.F.=432.0
C-23 8,041± S.F. G.F.F.=433.0
C-24 8,041± S.F. G.F.F.=433.5
C-25 8,041± S.F. G.F.F.=434.0
C-26 8,041± S.F. G.F.F.=435.5
C-27 6,892± S.F. G.F.F.=434.0
C-28 8,249± S.F. G.F.F.=434.5
C-39 7,367± S.F.
C-40 8,935± S.F.
C-41 9,298± S.F. G.F.F.=423.75
C-42 7,367± S.F.
C-43 8,533± S.F.
C-44 8,303± S.F.
C-45 8,497± S.F. G.F.F.=420.75
C-46 8,303± S.F.
C-47 8,596± S.F. G.F.F.=418.0
C-48 8,203± S.F.
C-49 8,079± S.F. G.F.F.=416.0
C-50 8,721± S.F.
C-51 8,079 S.F. W.O. FG=423.5 G.F.F.=431.5
C-52 8,721 S.F.
C-53 8,203 S.F. W.O. FG=423.0 G.F.F.=433.0
C-54 8,597 S.F.
C-55 8,303 S.F. W.O. FG=425.5 G.F.F.=433.5
C-56 8,497 S.F.
C-57 8,303 S.F.
C-58 8,497 S.F. W.O. FG=427.5 G.F.F.=435.5
C-59 7,367 S.F.
C-60 9,299 S.F. W.O. FG=426.5 G.F.F.=434.5

FES-1 SEE END SECTION DETAIL

PLUNGE POOL TO BE LINED WITH GEOTEXTILE FABRIC AND MEDIUM STONE FILL

140 LF DRY SWALE

STORMWATER 5
56,503± S.F.

OPEN 9
52,103± S.F.

OCS-4
RIM=416.5 (2'X2' GRATE EMERGENCY OVERFLOW)
10" ORIFICE AT 412.0
INV. OUT = 412.0 (12" HDPE)

ATTENUATION BASIN

62LF 24" HDPE @ 3.22%
INV.=410.0

FES-3 SEE END SECTION DETAIL

4' HIGH BLACK CHAIN LINK FENCE

PLUNGE POOL

PLUNGE POOL TO BE LINED WITH GEOTEXTILE FABRIC AND MEDIUM STONE FILL

12' WIDE GRAVEL ACCESS ROAD

DOUBLE GATE

30' WIDE UTILITY EASEMENT TO THE TOWN OF EAST GREENBUSH

FES-2 SEE END SECTION DETAIL

15' WIDE DRAINAGE EASEMENT TO THE TOWN OF EAST GREENBUSH

SHEET **-4
SHEET **-3

SHEET **-4
SHEET **-3

NOTE: 48 HOURS PRIOR TO ANY CONSTRUCTION ACTIVITIES, THE CONTRACTOR SHALL CONTACT THE U.F.P.O. (DIG SAFELY) TO LOCATE ALL UNDERGROUND UTILITIES. 1-800-962-7962

NO.	DATE	REVISIONS
4	12/15/21	REVISED AS PER TBE AND E GREENBUSH COMMENTS
3	11/30/21	REVISED AS PER CAC AND LGA/CE COMMENTS
2	11/03/21	REVISED AS PER TBE COMMENTS DATED 7/8/21
1	7/07/21	INITIAL SUBMISSION

BRETT L. STEENBURGH, P.E.
N.Y.S. LIC. NO. 075458

BRETT L. STEENBURGH, P.E. PLLC
2832 Rosendale Road
Niskayuna, NY 12309
(518) 383-0675
blsteenburgh@gmail.com

ENGINEERING THAT TRANSFORMS IMAGINATION INTO REALITY
A comprehensive civil engineering firm with a personal touch

APPLICANT:
CLDZ LLC
494 WESTERN TURNPIKE
ALTAMONT, NY 12009

GRADING PLAN
CLDZ, LLC
CARVER COURT
TOWN OF EAST GREENBUSH
COUNTY OF RENSSELAER STATE OF NEW YORK

SCALE: 1" = 40'
SHEET GP-4

DRAWN BY: BLS
CADD FILE:
JOB NO.
DATE: FEBRUARY 15, 2021

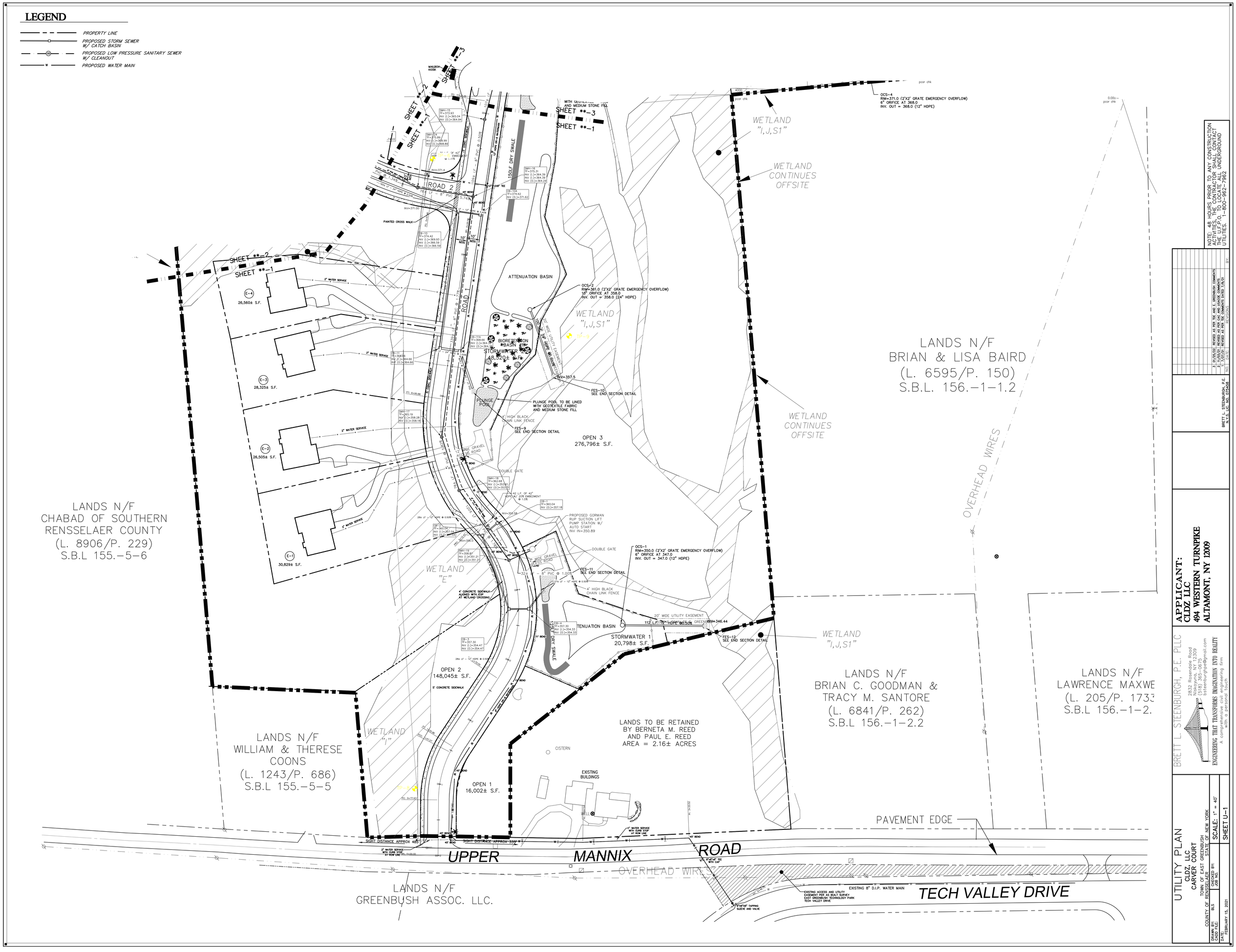
LEGEND
PROPERTY LINE
PROPOSED STORM SEWER W/ CATCH BASIN
PROPOSED LOW PRESSURE SANITARY SEWER W/ CLEANOUT
PROPOSED WATER MAIN
SHEET **-1
SHEET **-2
SHEET **-3
ROAD 1
ROAD 2
ATTENUATION BASIN
BIORETENTION BASIN #1
STORMWATER 2
48,520± S.F.
PLUNGE POOL
PLUNGE POOL TO BE LINED WITH GEOTEXTILE FABRIC AND MEDIUM STONE FILL
OPEN 3
276,796± S.F.
OPEN 2
148,045± S.F.
OPEN 1
16,002± S.F.
TENUATION BASIN
STORMWATER 1
20,798± S.F.
WETLAND "I,J,S1"
WETLAND CONTINUES OFFSITE
WETLAND "E"
WETLAND "I"
LANDS N/F
CHABAD OF SOUTHERN RENSSELAER COUNTY
(L. 8906/P. 229)
S.B.L 155.-5-6
LANDS N/F
WILLIAM & THERESE COONS
(L. 1243/P. 686)
S.B.L 155.-5-5
LANDS N/F
BRIAN & LISA BAIRD
(L. 6595/P. 150)
S.B.L. 156.-1-1.2
LANDS N/F
BRIAN C. GOODMAN & TRACY M. SANTORE
(L. 6841/P. 262)
S.B.L 156.-1-2.2
LANDS N/F
LAWRENCE MAXWE
(L. 205/P. 1733
S.B.L 156.-1-2.
LANDS TO BE RETAINED BY BERNETA M. REED AND PAUL E. REED
AREA = 2.16± ACRES
EXISTING BUILDINGS
CISTERN
OVERHEAD WIRES
PAVEMENT EDGE
UPPER MANNIX ROAD
TECH VALLEY DRIVE
LANDS N/F
GREENBUSH ASSOC. LLC.
EXISTING 8" D.I.P. WATER MAIN
NOTE: 48 HOURS PRIOR TO ANY CONSTRUCTION ACTIVITIES, THE CONTRACTOR SHALL CONTACT THE U.F.P.O. TO LOCATE ALL UNDERGROUND UTILITIES. 1-800-962-7962
APPLICANT:
CLDZ LLC
494 WESTERN TURNPIKE
ALTAMONT, NY 12009
BRETT L. STEENBURGH, P.E. PLLC
2832 Rosendale Road
Niskayuna, NY 12309
(518) 365-0675
bsteenburghpe@gmail.com
ENGINEERING THAT TRANSFORMS IMAGINATION INTO REALITY
A comprehensive civil engineering firm with a personal touch
UTILITY PLAN
CLDZ, LLC
CARVER COURT
TOWN OF EAST GREENBUSH
COUNTY OF RENSSELAER STATE OF NEW YORK
SCALE: 1" = 40'
SHEET U-1
DRAWN BY: BLS
CHECKED BY: JOB NO.
DATE: FEBRUARY 15, 2021

LEGEND

- PROPERTY LINE
- PROPOSED STORM SEWER W/ CATCH BASIN
- PROPOSED LOW PRESSURE SANITARY SEWER W/ CLEANOUT
- W — PROPOSED WATER MAIN

LANDS N/F THOMPSON HILL, LLC. (L. 7929/P. 272) S.B.L.

THOMPSON HILL ROAD

PAVEMENT EDGE

OVERHEAD WIRES

EXISTING 8" PVC GRAVITY SEWER

EXISTING 8" DIP WATER MAIN

MAINTAIN 18" OF VERTICAL SEPARATION

8" PVC INVERT OUT: 416.40± LPSS INV. IN = 417.00

6" PVC DRY FORCE MAIN

30" DUCTILE WATER MAIN

SIGHT DISTANCE APPROX 350'

EXISTING 20' WATER MAIN

LANDS N/F DANIEL BAZINET (L. 3844/P. 166) S.B.L. 144.-4-32

LANDS N/F MIGUEL RADHAMES SANTOS (L. 8461/P. 281) S.B.L. 144.-4-33

LANDS N/F DWIGHT HARVEY (L. 953/P. 336) S.B.L. 144.-4-34

LANDS N/F PATRICK BERGMAN & RAUL HARO (L. 253/P. 1587) S.B.L. 144.-4-35

POOL & POOL DECK (ENCROACHES)

SHED (ENCROACHES)

SHED (ENCROACHES)

WETLAND CONTINUES OFFSITE

TREE W/WIRE

TREE W/WIRE

OPEN 4 386,781± S.F.

WETLAND "G"

WETLAND "F,H"

WETLAND "H"

WETLAND CONTINUES OFFSITE

EXISTING SMITH LANE UTILIZED AS PAEDELT DRIVEWAY TO BE RE-CONSTRUCTED TO 20' WIDE EMERGENCY ACCESS SEE INSET ON OVERALL PLAN

30"x1" TAPPING SLEEVE AND VALVE

250' GRASS BLOCK PAVER ROAD 20' WIDE

SHED (ENCROACHES)

20' WIDE CRASH GATE

WALKWAY (ENCROACHES)

HOUSE

GARDEN (ENCROACHES)

LANDS N/F VOLKER PAEDELT LIVING TRUST (L. 4501/P. 316) S.B.L. 144.-4-39

LANDS N/F CATHERINE M. BERGMANN (L. 7285/P. 132) S.B.L. 144.-4-36

INGRESS EGRESS EASEMENT L. 4472 P. 77 SEE NOTE 5

LANDS N/F KARL A. & LOUISE H. BRANDT (L. 1195/P. 129) S.B.L. 144.-4-37

UTILITY EASEMENT TO NEW YORK TELEPHONE COMPANY L. 890 P. 445 SEE NOTE 6

LANDS N/F ANITA CULP (L. 6743/P. 122) S.B.L 155.-5-1.2

LANDS N/F SUSAN COLATOSTI &

STREET AND ACCESS EASEMENT

15" HDPE DR-9 WATERMAIN

24 L.F. OF 30" HDPE @ 0.10%

PROPOSED WETLAND IMPACT = 900± S.F. WETLAND CROSSING F

180' GRASS BLOCK PAVER ROAD 20' WIDE

20' WIDE CRASH GATE

ASPHALT APRON WITHIN ROW

28± LF - 12" HDPE @ 0.50%

CB-5 TF=384.67 INV (O.)=381.17

CB-6 TF=384.67 INV (L)=381.53 INV (O.)=381.53

SMH-20 TF=388.17 INV (O.)=380.00

CB-7 TF=381.45 INV (L)=378.45 INV (L)=378.45 INV (O.)=377.45

CB-8 TF=379.02 INV (L)=375.52 INV (O.)=375.52

CB-9 TF=377.08 INV (O.)=377.22

CB-37 TF=377.08 INV (L)=374.58 INV (L)=374.58 INV (O.)=374.58

SMH-21 TF=382.08 INV (L)=375.18 INV (O.)=375.08

CB-32 TF=381.45 INV (O.)=378.59

SMH-22 TF=379.89 INV (L)=372.79 INV (O.)=372.69

SMH-23 TF=377.77 INV (L)=370.87 INV (O.)=370.77

SMH- TF= INV (L)= INV (O.)=

SMH- TF= INV (L)= INV (O.)=

T-1	10,931± S.F.	
T-2	12,605± S.F.	
T-3	10,533± S.F.	
T-4	12,983± S.F.	
T-5	12,259± S.F.	
T-6	10,710± S.F.	
T-7	9,812± S.F.	
T-8	9,827± S.F.	
T-9	11,308± S.F.	
T-10	12,431± S.F.	
T-11	15,594± S.F.	
T-12	20,553± S.F.	
T-13	12,302± S.F.	
T-14	11,465± S.F.	
T-15	9,613± S.F.	
T-16	9,634± S.F.	
T-17	8,724± S.F.	
T-18	8,752± S.F.	
T-19	7,894± S.F.	
T-20	9,672± S.F.	
T-21	8,403± S.F.	
T-22	9,265± S.F.	
C-34	14,074± S.F.	
C-35	19,826± S.F.	

MAILBOX KIOSK

SHEET **-3

SHEET **-2

SHEET **-1

NOTE: 48 HOURS PRIOR TO ANY CONSTRUCTION ACTIVITIES, THE CONTRACTOR SHALL CONTACT THE U.F.P.O. TO LOCATE ALL UNDERGROUND UTILITIES. 1-800-962-7962

NO.	DATE	BY
1	7/27/21	REVISED AS PER TOE AND C.E.P.REVIEW COMMENTS
2	11/22/21	REVISED AS PER TOE AND TOWN COMMENTS
3	1/27/21	REVISED AS PER TOE COMMENTS DATED 1/8/21

BRETT L. STEENBURGH, P.E. PLLC
2832 Rosendale Road
Niskayuna, NY 12309
(518) 385-6752
brettsteenburgh@gmail.com
ENGINEERING THAT TRANSFORMS IMAGINATION INTO REALITY
A comprehensive civil engineering firm

APPLICANT:
CLDZ LLC
494 WESTERN TURNPIKE
ALTAMONT, NY 12009

UTILITY PLAN

CLDZ, LLC
CARVER COURT
TOWN OF EAST GREENBUSH
COUNTY OF RENSSELAER STATE OF NEW YORK

DRAWN BY:	BLS	JOB NO.	SCALE: 1" = 40'
CADD FILE:			SHEET U-2
DATE:	FEBRUARY 15, 2021		

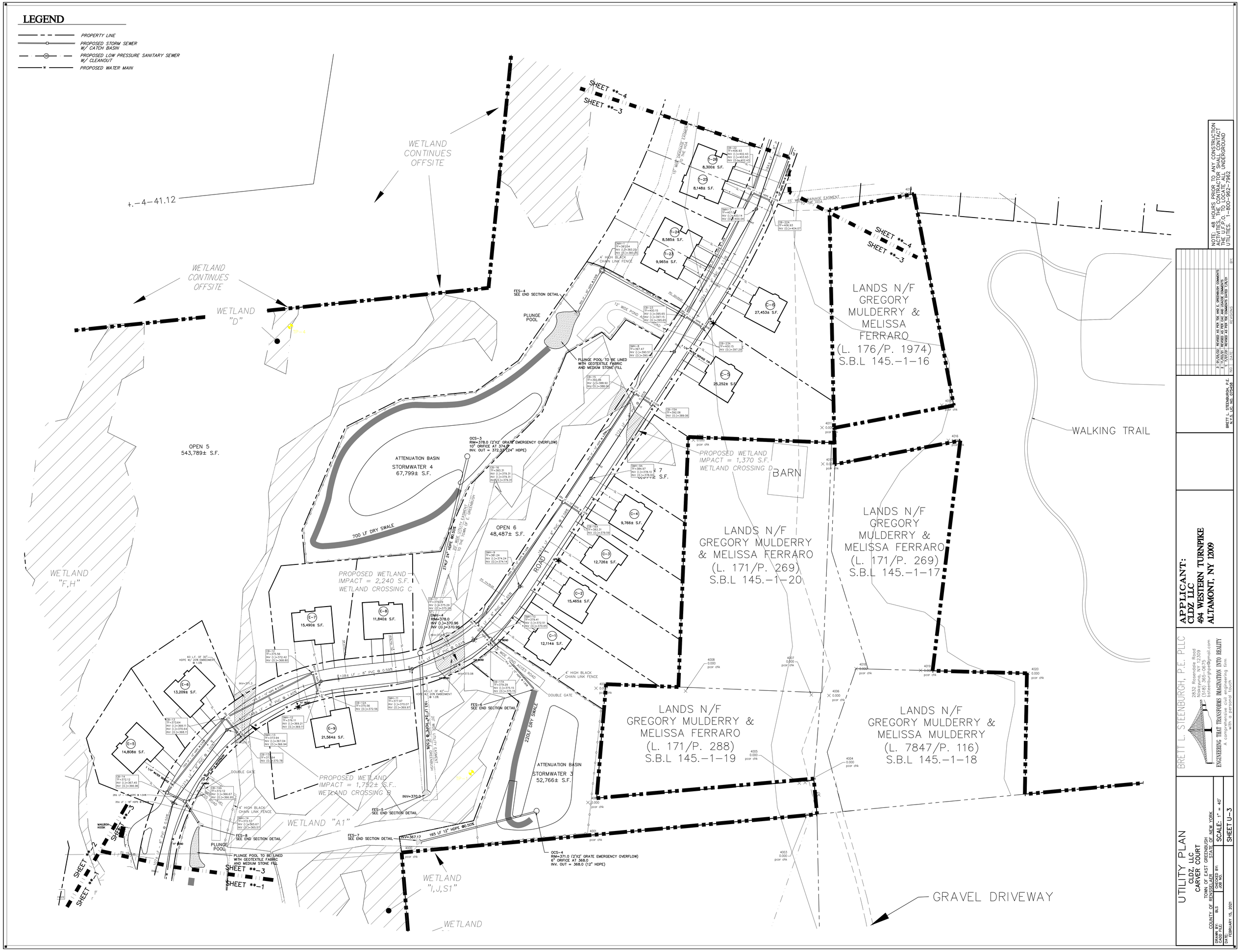
LEGEND
PROPERTY LINE
PROPOSED STORM SEWER W/ CATCH BASIN
PROPOSED LOW PRESSURE SANITARY SEWER W/ CLEANOUT
PROPOSED WATER MAIN
WETLAND CONTINUES OFFSITE
WETLAND "D"
WETLAND "F,H"
WETLAND "A1"
WETLAND "I,J,S1"
WETLAND
SHEET **-4
SHEET **-3
SHEET **-2
SHEET **-1
OPEN 5
543,789± S.F.
OPEN 6
48,487± S.F.
ATTENUATION BASIN
STORMWATER 4
67,799± S.F.
ATTENUATION BASIN
STORMWATER 3
52,766± S.F.
700 LF DRY SWALE
220LF DRY SWALE
PLUNGE POOL
PLUNGE POOL TO BE LINED WITH GEOTEXTILE FABRIC AND MEDIUM STONE FILL
PROPOSED WETLAND IMPACT = 2,240 S.F. WETLAND CROSSING C
PROPOSED WETLAND IMPACT = 1,752± S.F. WETLAND CROSSING B
PROPOSED WETLAND IMPACT = 1,370 S.F. WETLAND CROSSING D
BARN
LANDS N/F GREGORY MULDERRY & MELISSA FERRARO (L. 176/P. 1974) S.B.L 145.-1-16
LANDS N/F GREGORY MULDERRY & MELISSA FERRARO (L. 171/P. 269) S.B.L 145.-1-20
LANDS N/F GREGORY MULDERRY & MELISSA FERRARO (L. 171/P. 269) S.B.L 145.-1-17
LANDS N/F GREGORY MULDERRY & MELISSA FERRARO (L. 171/P. 288) S.B.L 145.-1-19
LANDS N/F GREGORY MULDERRY & MELISSA MULDERRY (L. 7847/P. 116) S.B.L 145.-1-18
WALKING TRAIL
GRAVEL DRIVEWAY
4' HIGH BLACK CHAIN LINK FENCE
DOUBLE GATE
FES-4 SEE END SECTION DETAIL
FES-5 SEE END SECTION DETAIL
FES-6 SEE END SECTION DETAIL
FES-7 SEE END SECTION DETAIL
FES-8 SEE END SECTION DETAIL
OCS-3 RIM=378.0 (2'X2' GRATE EMERGENCY OVERFLOW) 10" ORIFICE AT 374.0 INV. OUT = 372.33 (24" HDPE)
OCS-4 RIM=371.0 (2'X2' GRATE EMERGENCY OVERFLOW) 6" ORIFICE AT 368.0 INV. OUT = 368.0 (12" HDPE)
8,300± S.F.
8,148± S.F.
8,585± S.F.
9,965± S.F.
27,453± S.F.
25,252± S.F.
9,766± S.F.
12,726± S.F.
15,465± S.F.
12,114± S.F.
15,490± S.F.
11,840± S.F.
13,209± S.F.
21,564± S.F.
14,808± S.F.
NOTE: 48 HOURS PRIOR TO ANY CONSTRUCTION ACTIVITIES, THE CONTRACTOR SHALL CONTACT THE U.F.P.O. TO LOCATE ALL UNDERGROUND UTILITIES. 1-800-962-7962
APPLICANT: CLDZ LLC 494 WESTERN TURNPIKE ALTAMONT, NY 12009
BRETT L. STEENBURGH, P.E. PLLC
2832 Rosendale Road Niskayuna, NY 12309 (518) 365-0675 bsteenburgh@gmail.com
ENGINEERING THAT TRANSFORMS IMAGINATION INTO REALITY
A comprehensive civil engineering firm with a personal touch
UTILITY PLAN
CLDZ, LLC
CARVER COURT
TOWN OF EAST GREENBUSH
COUNTY OF RENSSELAER STATE OF NEW YORK
SCALE: 1" = 40'
SHEET U-3
DRAWN BY: BLS
CHECKED BY: JOB NO.
DATE: FEBRUARY 15, 2021

LEGEND

- PROPERTY LINE
- PROPOSED STORM SEWER W/ CATCH BASIN
- PROPOSED LOW PRESSURE SANITARY SEWER W/ CLEANOUT
- PROPOSED WATER MAIN

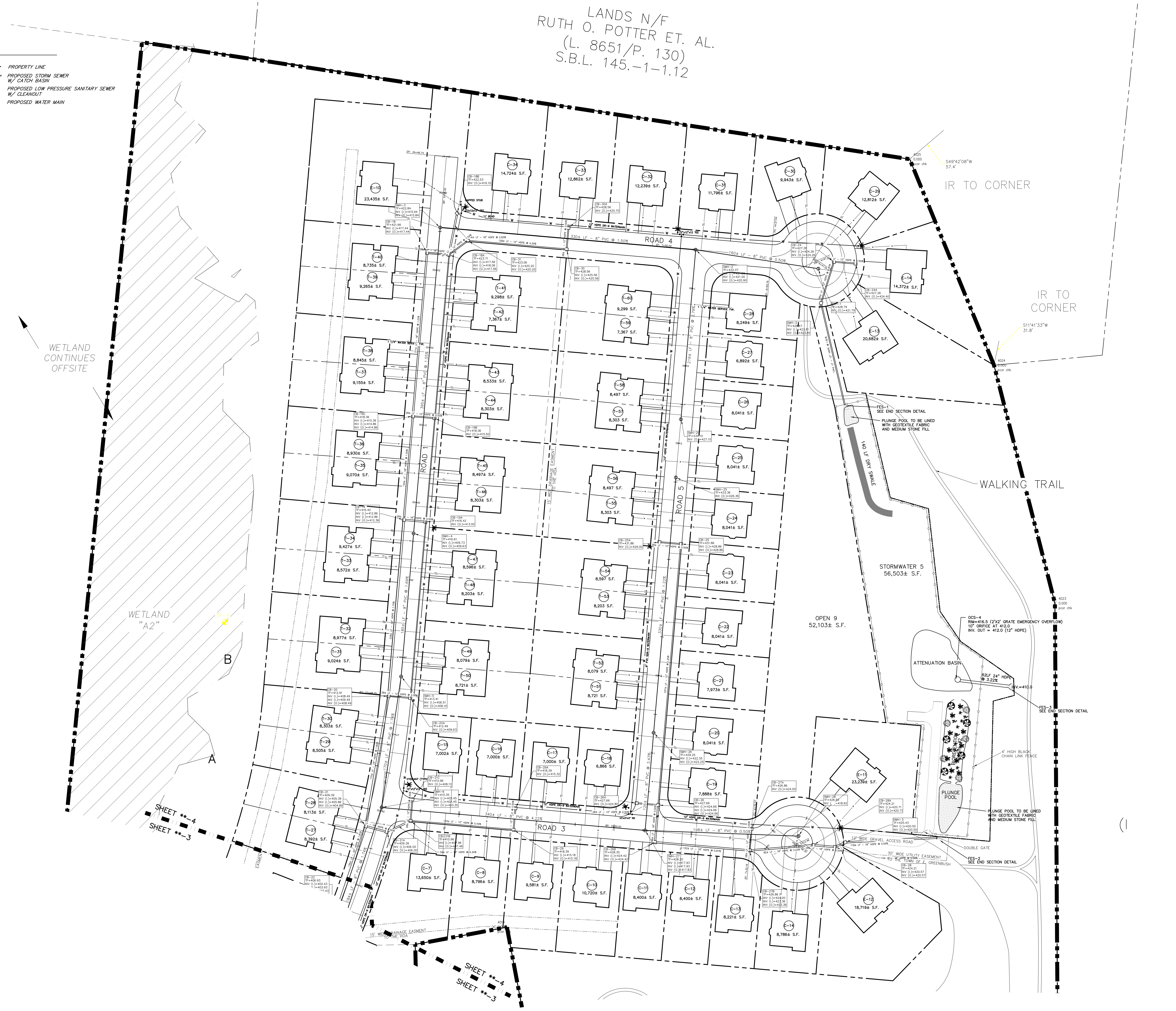

NOTE: 48 HOURS PRIOR TO ANY CONSTRUCTION ACTIVITIES, THE CONTRACTOR SHALL CONTACT THE U.F.P.O. TO LOCATE ALL UNDERGROUND UTILITIES. 1-800-962-7962

NO.	DATE:	REVISIONS	BY:
3	01/25/22	REVISED AS PER TDE AND E. GREENBUSH COMMENTS	
2	11/03/21	REVISED AS PER CAC AND USACOE COMMENTS	
1	7/27/21	REVISED AS PER TDE COMMENTS DATED 7/8/21	

BRETT L. STEENBURGH, P.E.
N.Y.S. LIC. NO. 075458

APPLICANT:
CLDZ LLC
494 WESTERN TURNPIKE
ALTAMONT, NY 12009

BRETT L. STEENBURGH, P.E. PLLC
2832 Rosendale Road
Niskayuna, NY 12309
(518) 365-0675
bsteenburghpe@gmail.com

ENGINEERING THAT TRANSFORMS IMAGINATION INTO REALITY
A comprehensive civil engineering firm with a personal touch

UTILITY PLAN
CLDZ, LLC
CARVER COURT
TOWN OF EAST GREENBUSH
COUNTY OF RENSSELAER STATE OF NEW YORK

DRAWN BY: BLS
CADD FILE:
CHECKED BY:
JOB NO.
DATE: FEBRUARY 15, 2021
SCALE: 1" = 40'
SHEET U-4

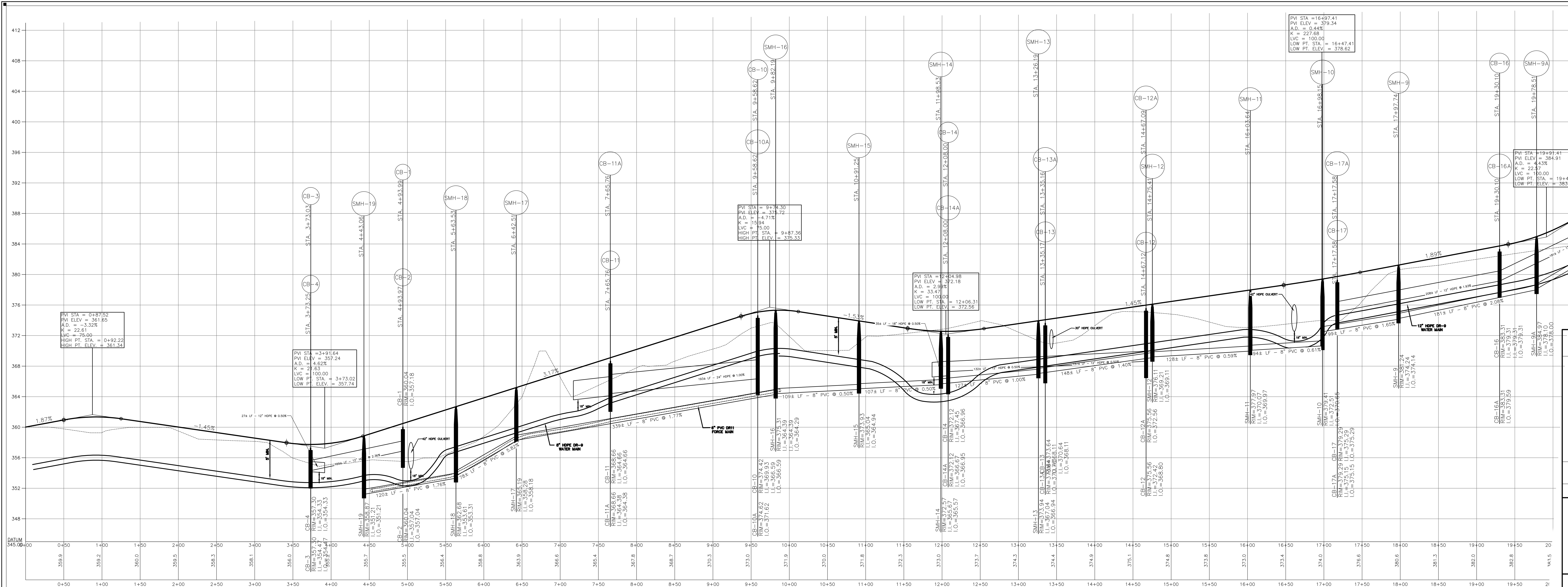

ROAD 1

SCALE : VERTICAL 1" = 5'
HORIZONTAL 1" = 50'

NOTE: 48 HOURS PRIOR TO ANY CONSTRUCTION ACTIVITIES, THE CONTRACTOR SHALL CONTACT THE U.F.P.O. TO LOCATE ALL UNDERGROUND UTILITIES. 1-800-962-7962

NO.	DATE:	REVISIONS	BY:
3	01/25/22	REVISED AS PER TDE AND E. GREENBUSH COMMENTS	
2	11/03/21	REVISED AS PER CAC AND USACOE COMMENTS	
1	7/27/21	REVISED AS PER TDE COMMENTS DATED 7/8/21	

BRETT L. STEENBURGH, P.E.
N.Y.S. LIC. NO. 075458

APPLICANT:
CLDZ LLC
494 WESTERN TURNPIKE
ALTAMONT, NY 12009

BRETT L. STEENBURGH, P.E. PLLC
2832 Rosendale Road
Niskayuna, NY 12309
(518) 365-0675
bsteenburghpe@gmail.com
ENGINEERING THAT TRANSFORMS IMAGINATION INTO REALITY
A comprehensive civil engineering firm with a personal touch

PROFILE ROAD 1
CLDZ, LLC
CARVER COURT
TOWN OF EAST GREENBUSH
COUNTY OF RENSSELAER STATE OF NEW YORK

DRAWN BY: BLS
CADD FILE:
CHECKED BY:
JOB NO.
DATE: FEBRUARY 15, 2021
SCALE: AS NOTED
SHEET P-1

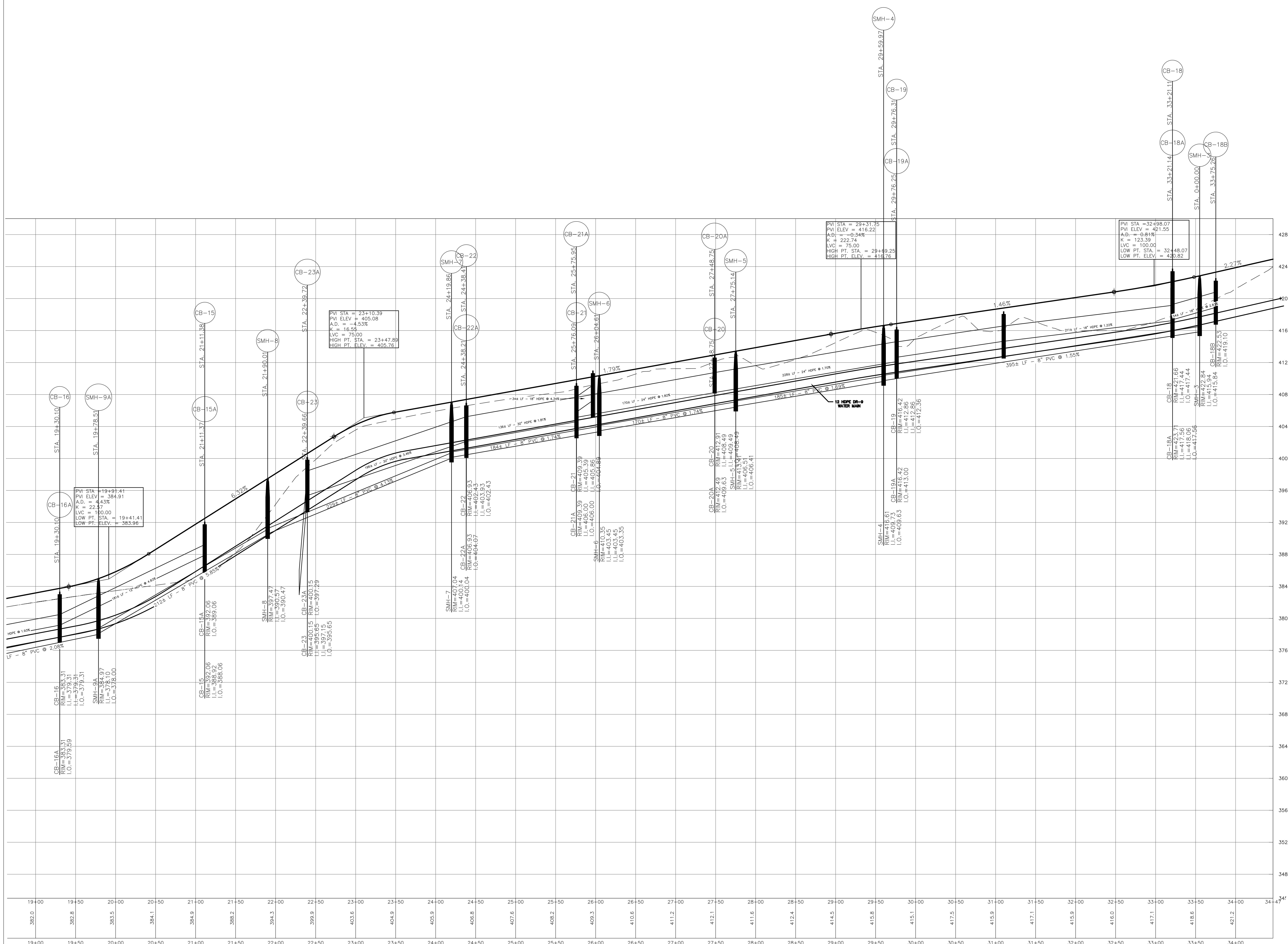

ROAD 1

SCALE : VERTICAL 1" = 5'
HORIZONTAL 1" = 50'

NOTE: 48 HOURS PRIOR TO ANY CONSTRUCTION ACTIVITIES, THE CONTRACTOR SHALL CONTACT THE U.F.P.O. TO LOCATE ALL UNDERGROUND UTILITIES. 1-800-962-7962

NO.	DATE:	REVISIONS	BY:
3	01/25/22	REVISED AS PER TDE AND E. GREENBUSH COMMENTS	
2	11/03/21	REVISED AS PER CAC AND USACOE COMMENTS	
1	7/27/21	REVISED AS PER TDE COMMENTS DATED 7/8/21	

BRETT L. STEENBURGH, P.E.
N.Y.S. LIC. NO. 075458

APPLICANT:
CLDZ LLC
494 WESTERN TURNPIKE
ALTAMONT, NY 12009

BRETT L. STEENBURGH, P.E. PLLC
2832 Rosendale Road
Niskayuna, NY 12309
(518) 365-0675
bsteenburghpe@gmail.com
ENGINEERING THAT TRANSFORMS IMAGINATION INTO REALITY
A comprehensive civil engineering firm with a personal touch

PROFILE ROAD 1

CLDZ, LLC
CARVER COURT
TOWN OF EAST GREENBUSH
COUNTY OF RENSSELAER STATE OF NEW YORK

DRAWN BY: BLS
CADD FILE:
CHECKED BY:
JOB NO.
SCALE: AS NOTED
DATE: FEBRUARY 15, 2021
SHEET P-2

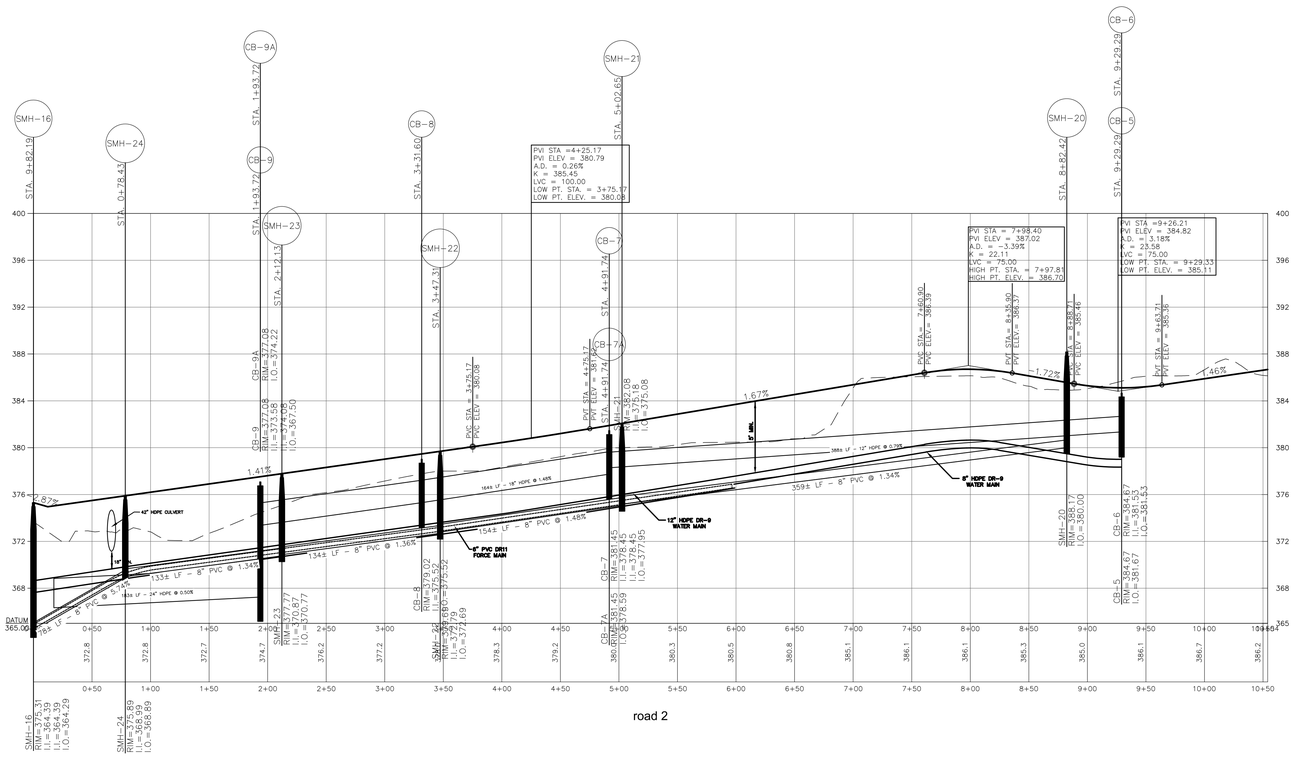

ROAD 2

SCALE : VERTICAL 1" = 5'
HORIZONTAL 1" = 50'

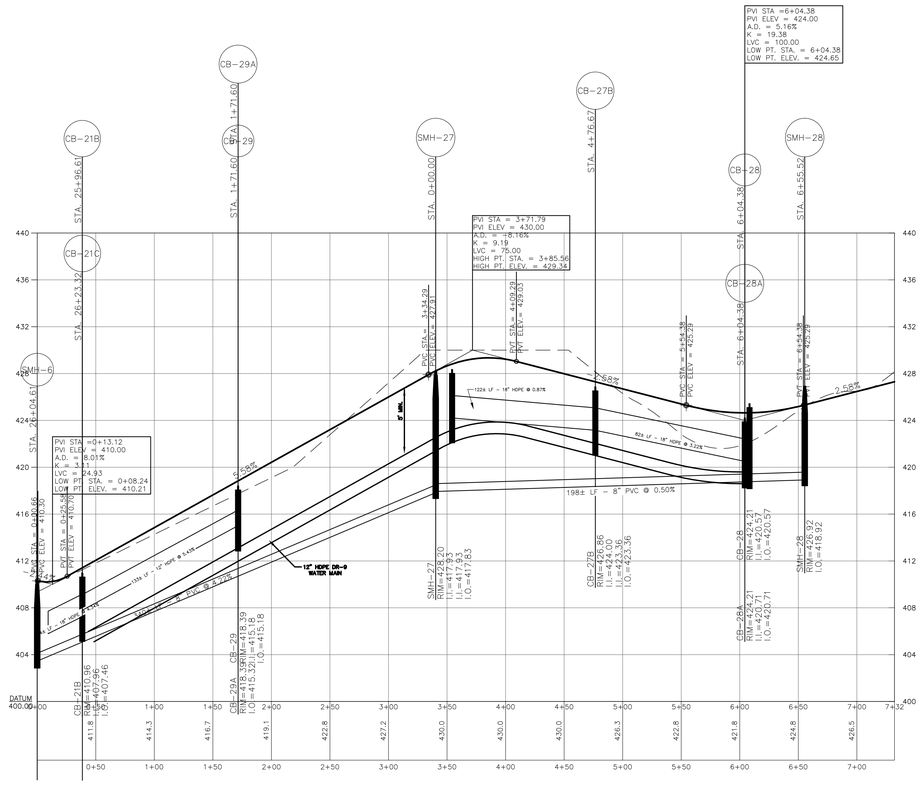

ROAD 3

SCALE : VERTICAL 1" = 5'
HORIZONTAL 1" = 50'

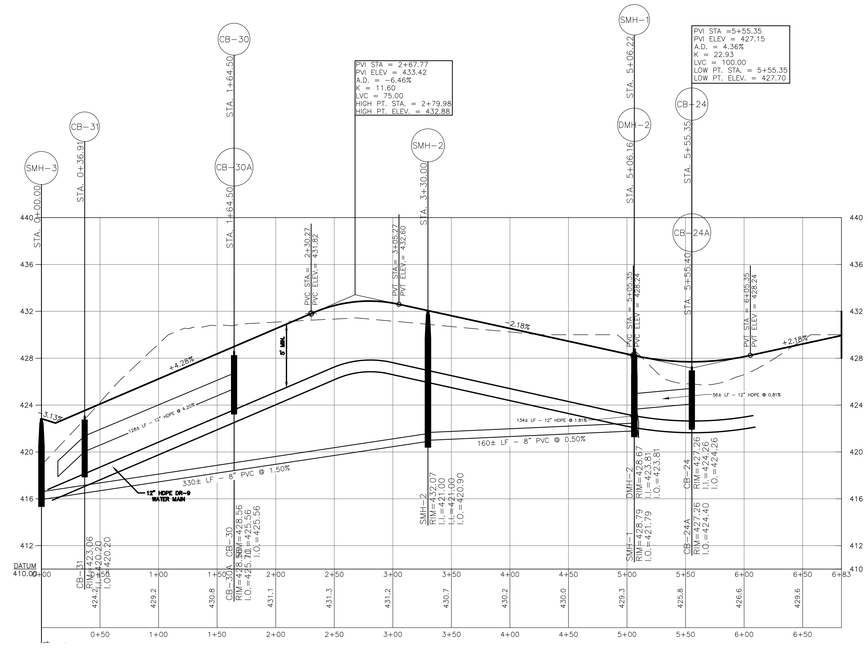

ROAD 4

SCALE : VERTICAL 1" = 5'
HORIZONTAL 1" = 50'

NOTE: 48 HOURS PRIOR TO ANY CONSTRUCTION ACTIVITIES, THE CONTRACTOR SHALL CONTACT THE U.F.P.O. (1-800-962-7962) FOR LOCATION OF ALL UNDERGROUND UTILITIES. 1-800-962-7962

NO.	DATE	BY
1	7/27/21	REVISED AS PER TRC AND C. GREENBAUM COMMENTS
2	11/30/21	REVISED AS PER C&C AND USACOE COMMENTS
3	1/27/21	REVISED AS PER TOE COMMENTS DATED 1/4/21

BRETT L. STEENBURGH, P.E.
N.Y.S. LIC. NO. 075458

BRETT L. STEENBURGH, P.E. PLLC
2832 Rosendale Road
Niskayuna, NY 12309
(518) 365-0626
steenburghengineering@gmail.com
ENGINEERING THAT TRANSFORMS IMAGINATION INTO REALITY
with a personal touch

APPLICANT:
CLDZ LLC
494 WESTERN TURNPIKE
ALTAMONT, NY 12009

PROFILE ROADS 2, 3 & 4
CLDZ, LLC
CARVER COURT
TOWN OF EAST GREENBUSH
COUNTY OF RENSSELAER STATE OF NEW YORK

DRAWN BY: BLS | JOB NO.
CADD FILE:
DATE: FEBRUARY 15, 2021
SCALE: AS NOTED
SHEET P-3

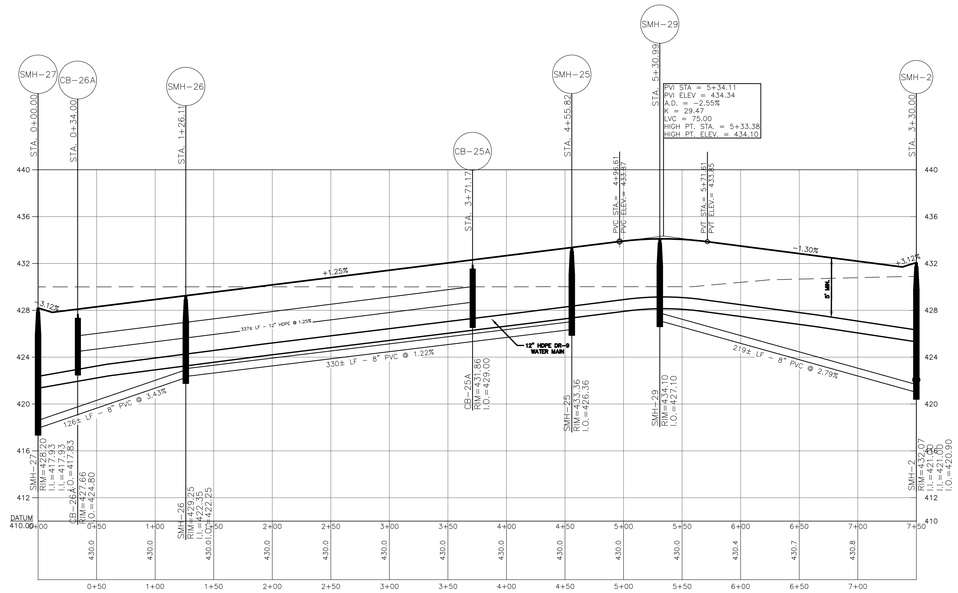

ROAD 5

SCALE : VERTICAL 1" = 5'
HORIZONTAL 1" = 50'

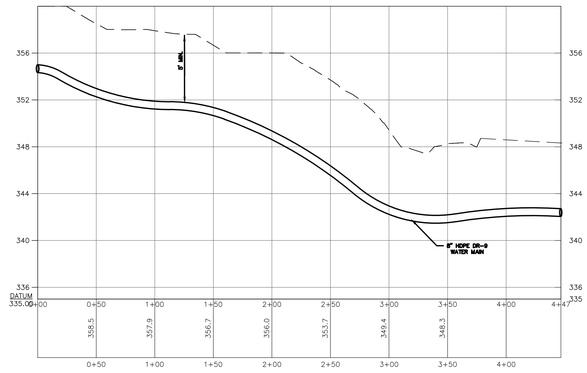

MANNIX ROAD WATER LINE

SCALE : VERTICAL 1" = 5'
HORIZONTAL 1" = 50'

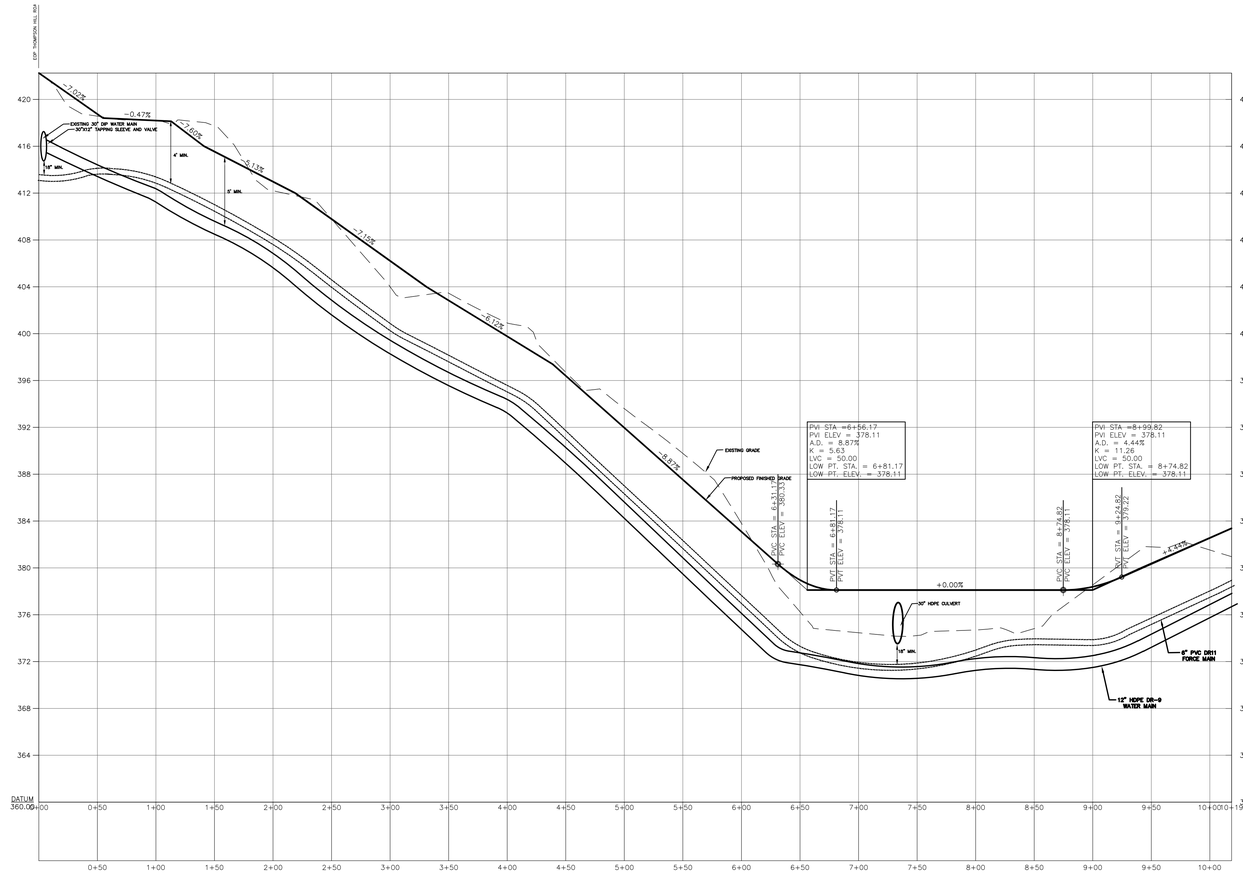

EMERGENCY ACCESS

SCALE : VERTICAL 1" = 5'
HORIZONTAL 1" = 50'

NOTE: 48 HOURS PRIOR TO ANY CONSTRUCTION ACTIVITIES, THE CONTRACTOR SHALL CONTACT THE U.F.P.O. TO LOCATE ALL UNDERGROUND UTILITIES. 1-800-962-7962

NO.	DATE	REVISIONS	BY
4	11/02/21	REVISED AS PER TEC AND E. GREENBUSH COMMENTS	
3	11/02/21	REVISED AS PER CDC AND ISAACK COMMENTS	
2	7/27/21	REVISED AS PER TEC COMMENTS DATED 7/9/21	
1	7/27/21		

BRETT L. STEENBURGH, P.E.
N.Y.S. LIC. NO. 075458

PROFILE ROAD 5
CLDZ, LLC
CARVER COURT
TOWN OF EAST GREENBUSH
COUNTY OF RENSSELAER STATE OF NEW YORK

DRAWN BY: BLS | CHECKED BY:
CADD FILE: | JOB NO.
DATE: FEBRUARY 15, 2021

SCALE: AS NOTED

SHEET P-4

APPLICANT:
CLDZ LLC
494 WESTERN TURNPIKE
ALTAMONT, NY 12009

BRETT L. STEENBURGH, P.E. PLLC
2832 Rosendale Road
Niskayuna, NY 12309
(518) 385-0676
blsteenburgh@gmail.com

ENGINEERING THAT TRANSFORMS IMAGINATION INTO REALITY
A comprehensive civil engineering firm with a personal touch

LEGEND

- PROPERTY LINE
- PROPOSED STORM SEWER W/ CATCH BASIN
- PROPOSED LOW PRESSURE SANITARY SEWER W/ CLEANOUT
- PROPOSED SILT FENCE
- 306 EXISTING CONTOUR
- 300 PROPOSED CONTOUR
- EROSION AND SEDIMENT CONTROL BLANKET (SEE NOTE 8)

MAINTENANCE

1. SEDIMENT SHALL BE REMOVED FROM SEDIMENT TRAPS WHENEVER THEIR CAPACITY HAS BEEN REDUCED BY 50%.

2. ALL EROSION AND SEDIMENT CONTROL DEVICES SHALL BE INSPECTED WITHIN 24 HOURS OF A STORM EVENT BY THE SITE CONTRACTOR AND REPAIRED AND/OR MODIFIED AS REQUIRED TO BE GOOD WORKABLE CONDITION.

3. THE CONTRACTOR SHALL CONDUCT AN INSPECTION OF THE SITE ON A DAILY BASIS TO COLLECT LITTER AND CONSTRUCTION DEBRIS AND DISPOSE OF LEGALLY.

4. ANY STOCKPILES OF FILL, TOPSOIL, EXCAVATED MATERIAL SHALL BE COVERED OR CONTAINED BY SEDIMENT CONTROL FENCE TO PREVENT EROSION.

GENERAL E & SC NOTES;

1. NO MATERIAL AND/OR EQUIPMENT SHALL BE STOCKPILED OR STORED IN THE LOCATION OF THE SEPTIC FIELDS.

2. IT IS ASSUMED THAT DUE TO THE HIGH PERMIABILITY OF THE ON SITE SOILS NO SEDIMENT BASINS SHALL BE REQUIRED; HOWEVER, IF SEDIMENT BASINS ARE ARE DEEMED NECESSARY DURING CONSTRUCTION, THEY SHALL BE CONSTRUCTED IN ACCORDANCE WITH THE NYS GUIDELINES FOR EROSION AND SEDIMENT CONTROL.

S.W.P.P.P. REQUIREMENTS

1. THE CONTRACTOR UNDERTAKING SITE CONSTRUCTION OF THIS PROJECT MUST SIGN THE CERTIFICATION IN THE SWPPP AND BE FAMILIAR WITH ALL REQUIREMENTS OF THE SWPPP AND REQUIREMENTS OF THE NYS DEC SPDES GENERAL PERMIT FOR STORMWATER DISCHARGES FROM CONSTRUCTION ACTIVITY – PERMIT No.-GP-00-20-001.

2. THE CONTRACTOR MUST IS RESPONSIBLE TO COMPLY WITH THE TERMS OF THE NYS DEC SPDES GENERAL PERMIT FOR STORMWATER DISCHARGES FROM CONSTRUCTION ACTIVITY – PERMIT No. GP-0-20-001. COPIES OF THE GENERAL PERMIT ARE AVAILABLE BY CALLING DEC (518) 402-8109 AND ON LINE. ADDITIONALLY, THE CONTRACTOR SHALL COMPLY WITH ALL TOWN OF EAST GREENBUSH MS4 REGULATIONS.

3. A NOTICE OF INTENT (NOI) MUST BE SUBMITTED TO DEC PRIOR TO INITIATING WORK.

4. THE SWPPP INCLUDES INFORMATION ON ALL DRAWINGS AND THE STORMWATER POLLUTION PREVENTION PLAN

5. PRIOR TO COMMENCEMENT OF CONSTRUCTION, THE CONTRACTOR SHALL HAVE THE ENGINEER CONDUCT AN ASSESSMENT OF THE SITE AND CERTIFY IN AN INSPECTION REPORT THAT THE APPROPRIATE EROSION AND SEDIMENT CONTROLS HAVE BEEN ADEQUATELY INSTALLED. FOLLOWING COMMENCEMENT OF CONSTRUCTION, THE ENGINEER SHALL MAKE SITE INSPECTIONS EVERY 7 DAYS. AND SHALL PREPARE A REPORT AS REQUIRED BY THE GP-0-20-001.

6. THE CONTRACTOR SHALL MAINTAIN A RECORD OF ALL INSPECTION REPORTS IN A SITE LOG BOOK, MAINTAINED ON SITE AND AVAILABLE TO THE PERMITTING AUTHORITY UPON REQUEST.

7. AT COMPLETION OF CONSTRUCTION, THE CONTRACTOR SHALL PERFORM A FINAL INSPECTION TO CERTIFY THAT THE SITE HAS UNDERGONE FINAL STABILIZATION AND THAT ALL TEMPORARY EROSION AND SEDIMENTATION CONTROLS HAVE BEEN REMOVED. UPON CERTIFICATION OF COMPLETION A NOTICE OF TERMINATION (NOT) SHALL BE SUBMITTED TO NYS DEC.

8. ALL SLOPES STEEPER THAN A 1V:4H SHALL BE STABILIZED WITH SEED, FERTILIZER AND A ROLLED EROSION CONTROL BLANKET.

9. ALL SLOPES LESS THAN A 1V:4H SHALL BE STABILIZED WITH SEED, FERTILIZER AND MULCH

10. ALL SEED, MULCH AND FERTILIZER APPLICATION RATES SHALL BE IN ACCORDANCE WITH THE NEW YORK STATE STANDARDS AND SPECIFICATIONS FOR EROSION AND SEDIMENT CONTROL "THE BLUE BOOK".

11. ALL WORK PERFORMED ON THE SITE SHALL BE IN ACCORDANCE WITH THE NEW YORK STATE STANDARDS AND SPECIFICATIONS FOR EROSION AND SEDIMENT CONTROL "THE BLUE BOOK".

12. ALL WORK PERFORMED IN ACCORDANCE WITH THE SWPPP.

13. PROJECT CONSTRUCTION SHALL BE PHASED SUCH THAT SOIL DISTURBANCE SHALL NOT EXCEED FIVE (5.0) ACRES AT A TIME.

14. THE OWNER AND APPLICANT ACKNOWLEDGE THAT THE PROPOSED PRIVATELY OWNED AND MAINTAINED STORM SEWER SYSTEM WAS DESIGNED BY THEIR ENGINEER TO CONVEY THE 10 YEAR STORM EVENT AND PERIODIC PONDING OF STORMWATER WILL OCCASIONALLY OCCUR ON THE SITE. THE TOWN OF ROTTERDAM AND TOWN DESIGNATED ENGINEER SHALL BE HELD HARMLESS FOR THIS DESIGN OR CONDITION.

DECOMPACTION NOTES

1. ALL AREAS NOTED AS A DECOMPACTION AREA SHALL BE DECOMPACTED IN ACCORDANCE THE NEW YORK STATE DEC PUBLICATION "DEEP RIPPING AND DECOMPACTION 2008"

2. ALL OTHER DISTURBED AREAS SHALL BE RESTORED IN ACCORDANCE WITH TABLE 5.3 OF THE NYSSDM FOR THE APPROPRIATE SOIL HYDROLOGIC SOIL GROUP (GROUP A).

3. EVERY EFFORT SHOULD BE MADE TO UTILIZE THE HAUL ROADS SHOWN ON THE PLAN FOR HEAVY CONSTRUCTION TRAFFIC (I.E. DUMP TRUCKS, CONCRETE TRUCKS, EXCAVATORS ETC.) IF AN AREA OUTSIDE OF THE HAUL ROAD AND WITHIN AN INFILTRATION PRACTICE (IE POROUS ASPHALT, INFILTRATION TRENCH ETC.) IS DISTURBED BY HEAVY CONSTRUCTION TRAFFIC IT SHALL BE DECOMPACTED IN ACCORDANCE WITH NOTE 1 ABOVE.

DISTURBANCE AREA NOTE

1. AT NO TIME SHALL THE TOTAL DISTURBANCE EXCEED 5 ACRES. FOR AREAS OF DISTURBANCE AND SEQUENCE PLEASE REFER TO THE PROJECT SWPPP WHICH OUTLINES HOW THIS CAN BE ACHIEVED

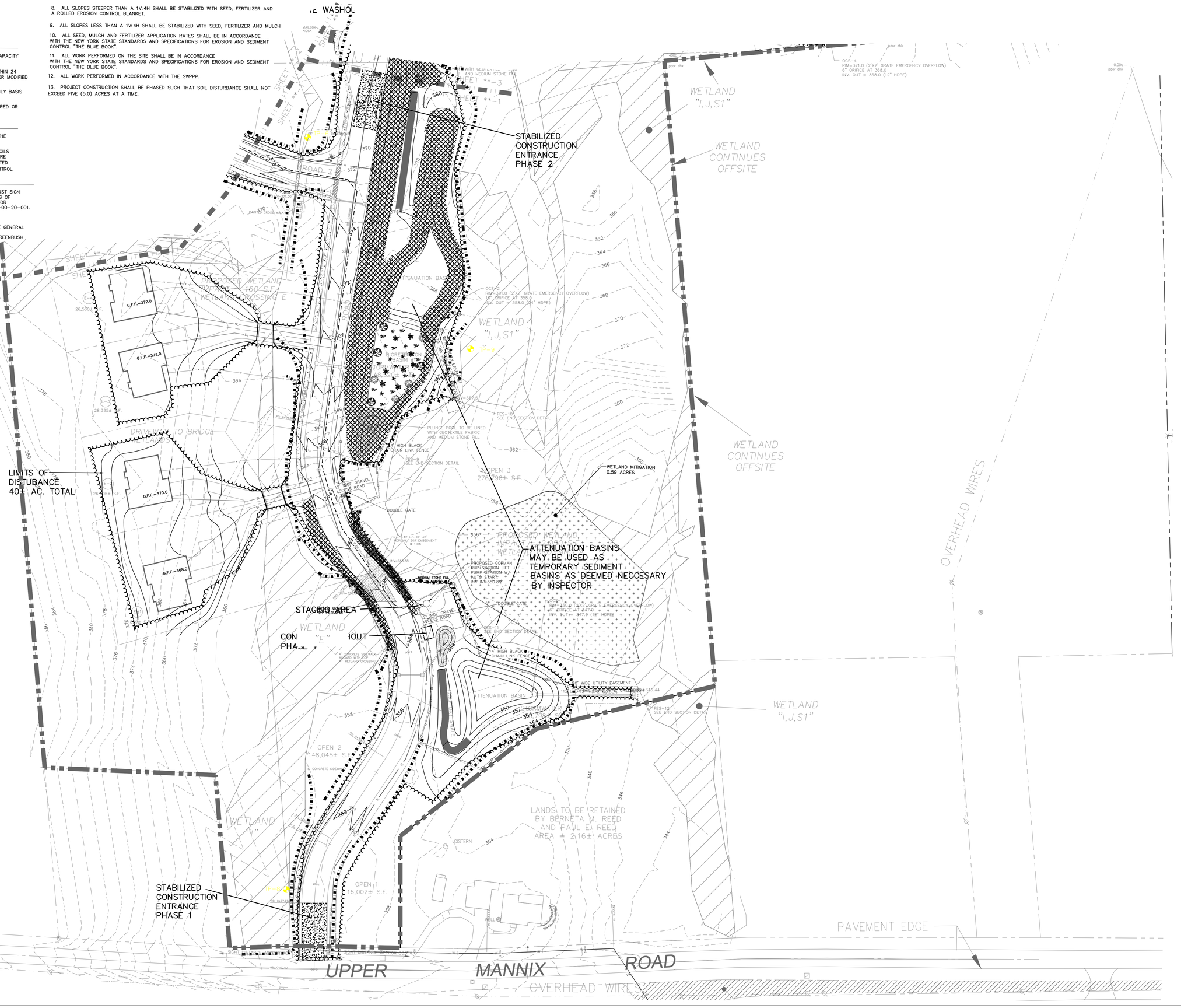

NOTE: 48 HOURS PRIOR TO ANY CONSTRUCTION ACTIVITIES, THE CONTRACTOR SHALL CONTACT THE NEW YORK STATE ONE CALL CENTER FOR UTILITIES. 1-800-962-7962

NO.	DATE	REVISIONS
1	7/22/21	REVISED AS PER TOWN COMMENTS
2	8/23/21	REVISED AS PER NYS DEC AND ECL COMMENTS
3	9/20/21	REVISED AS PER TOWN COMMENTS DATED 9/8/21

BRETT L. STEENBURGH, P.E.
N.Y.S. LIC. NO. 075488

APPLICANT:
CLDZ LLC
494 WESTERN TURNPIKE
ALTAMONT, NY 12009

BRETT L. STEENBURGH, P.E. PLLC
2832 Rosendale Road
Niskayuna, NY 12309
(518) 356-0613
brettsteenburgh@gmail.com
ENGINEERING THAT TRANSFORMS IMAGINATION INTO REALITY
with a personal touch

E & SC PLAN
CLDZ, LLC
CARVER COURT
TOWN OF EAST GREENBUSH
COUNTY OF RENSSELAER STATE OF NEW YORK

DRAWN BY:	BLS	JOB NO.	SCALE: 1" = 40'
CADD FILE:			SHEET ESC-1
DATE:	FEBRUARY 15, 2021		

NOTE: 48 HOURS PRIOR TO ANY CONSTRUCTION ACTIVITIES, THE CONTRACTOR SHALL CONTACT THE U.F.P.O. TO LOCATE ALL UNDERGROUND UTILITIES. 1-800-962-7962

NO.	DATE	REVISIONS	BY
3	01/25/22	REVISED AS PER TDE AND E. GREENBUSH COMMENTS	
2	11/03/21	REVISED AS PER CAC AND USACOE COMMENTS	
1	7/27/21	REVISED AS PER TDE COMMENTS DATED 7/8/21	

BRETT L. STEENBURGH, P.E.
N.Y.S. LIC. NO. 075458

APPLICANT:
CLDZ LLC
494 WESTERN TURNPIKE
ALTAMONT, NY 12009

BRETT L. STEENBURGH, P.E. PLLC
2832 Rosendale Road
Niskayuna, NY 12309
(518) 365-0675
bsteenburghpe@gmail.com
ENGINEERING THAT TRANSFORMS IMAGINATION INTO REALITY
A comprehensive civil engineering firm with a personal touch

E & SC PLAN
CLDZ, LLC
CARVER COURT
TOWN OF EAST GREENBUSH
COUNTY OF RENSSELAER STATE OF NEW YORK

DRAWN BY: BLS
CADD FILE:
CHECKED BY:
JOB NO.
DATE: FEBRUARY 15, 2021
SCALE: 1" = 40'
SHEET ESC-2

LEGEND

- PROPERTY LINE
- PROPOSED STORM SEWER W/ CATCH BASIN
- PROPOSED LOW PRESSURE SANITARY SEWER W/ CLEANOUT
- PROPOSED SILT FENCE
- 306 EXISTING CONTOUR
- 300 PROPOSED CONTOUR
- EROSION AND SEDIMENT CONTROL BLANKET (SEE NOTE 8)

NOTE: 48 HOURS PRIOR TO ANY CONSTRUCTION ACTIVITIES, THE CONTRACTOR SHALL CONTACT THE STATE O.U.C. FOR LOCATION OF ALL UNDERGROUND UTILITIES. 1-800-962-7962

ATTENUATION BASINS MAY BE USED AS TEMPORARY SEDIMENT BASINS AS DEEMED NECCESARY BY INSPECTOR

ATTENUATION BASINS MAY BE USED AS TEMPORARY SEDIMENT BASINS AS DEEMED NECCESARY BY INSPECTOR

LIMITS OF DISTUBANCE 40± AC. TOTAL

STAGING AREA

CONCRETE WASHOUT

PHASE 1

WETLAND CONTINUES OFFSITE

WETLAND "D"

WETLAND "F,H"

WETLAND "A1"

WETLAND "I,J,S1"

PROPOSED WETLAND IMPACT = 1,370 S.F. WETLAND CROSSING D

PROPOSED WETLAND IMPACT = 2,240 S.F. WETLAND CROSSING C

PROPOSED WETLAND IMPACT = 1,782± S.F.. WETLAND CROSSING B

ANALYSIS POINT B

LANDS N/F GREGORY MULDERRY & MELISSA FERRARO (L. 176/P. 1974) S.B.L 145.-1-16

LANDS N/F GREGORY MULDERRY & MELISSA FERRARO (L. 171/P. 269) S.B.L 145.-1-20

LANDS N/F GREGORY MULDERRY & MELISSA FERRARO (L. 171/P. 269) S.B.L 145.-1-17

LANDS N/F GREGORY MULDERRY & MELISSA FERRARO (L. 171/P. 288) S.B.L 145.-1-19

LANDS N/F GREGORY MULDERRY & MELISSA MULDERRY (L. 7847/P. 116) S.B.L 145.-1-18

BARN

WALKING TRAIL

GRAVEL DRIVEWAY

OPEN 5 543,789± S.F.

OPEN 6 48,489± S.F.

OPEN 7 8,971± S.F.

ATTENUATION BASIN STORMWATER 4 67,799± S.F.

ATTENUATION BASIN STORMWATER 3 21,766± S.F.

700 LF DRY SWALE

165 LF 12" HDPE @0.5%

OCS-3 RIM=378.0 (2'X2' GRATE EMERGENCY OVERFLOW) 10" ORIFICE AT 374.0 INV. OUT = 372.33 (10" HDPE)

OCS-4 RIM=371.0 (2'X2' GRATE EMERGENCY OVERFLOW) 6" ORIFICE AT 368.0 INV. OUT = 368.0 (12" HDPE)

FES-4 SEE END SECTION DETAIL

FES-5 SEE END SECTION DETAIL

FES-6 SEE END SECTION DETAIL

FES-7 SEE END SECTION DETAIL

FES-8 SEE END SECTION DETAIL

PLUNGE POOL TO BE LINED WITH GEOTEXTILE FABRIC AND MEDIUM STONE FILL

MEDIUM STONE FILL ON 1:2 SLOPES

20' WIDE UTILITY EASEMENT

SHEET **-4

SHEET **-3

SHEET **-5

SHEET **-1

4	7/23/21	REVISED AS PER TBE AND E. GREENBUSH COMMENTS	BS
3	5/25/21	REVISED AS PER CAC AND EGDOSE COMMENTS	BS
2	3/26/21	REVISED AS PER TBE COMMENTS DATED 2/8/21	BS
1	1/27/21	REVISED AS PER TBE COMMENTS DATED 2/8/21	BS
NO.	DATE	REVISIONS	BY

BRETT L. STEENBURGH, P.E.
N.Y.S. LIC. NO. 075458

BRETT L. STEENBURGH, P.E. PLLC
2832 Rosendale Road
Niskayuna, NY 12309
(518) 355-0982
bsteenburgh@gmail.com
ENGINEERING THAT TRANSFORMS IMAGINATION INTO REALITY
A comprehensive civil engineering firm

APPLICANT:
CLDZ LLC
494 WESTERN TURNPIKE
ALTAMONT, NY 12009

E & SC PLAN
CLDZ, LLC
CARVER COURT
TOWN OF EAST GREENBUSH
COUNTY OF RENSSELAER STATE OF NEW YORK

DRAWN BY:	BLS	JOB NO.	SCALE: 1" = 40'
CADD FILE:			SHEET ESC-3
DATE:	FEBRUARY 15, 2021		

NOTE: 48 HOURS PRIOR TO ANY CONSTRUCTION ACTIVITIES, THE CONTRACTOR SHALL CONTACT THE U.F.P.O. TO LOCATE ALL UNDERGROUND UTILITIES. 1-800-962-7962

NO.	DATE	REVISIONS	BY
3	01/25/22	REVISED AS PER TDE AND E. GREENBUSH COMMENTS	
2	11/03/21	REVISED AS PER CAC AND USACOE COMMENTS	
1	7/27/21	REVISED AS PER TDE COMMENTS DATED 7/8/21	

BRETT L. STEENBURGH, P.E.
N.Y.S. LIC. NO. 075458

APPLICANT:
CLDZ LLC
494 WESTERN TURNPIKE
ALTAMONT, NY 12009

BRETT L. STEENBURGH, P.E. PLLC
2832 Rosendale Road
Niskayuna, NY 12309
(518) 365-0675
bsteenburghpe@gmail.com
ENGINEERING THAT TRANSFORMS IMAGINATION INTO REALITY
A comprehensive civil engineering firm with a personal touch

E & SC PLAN

CLDZ, LLC
CARVER COURT
TOWN OF EAST GREENBUSH
COUNTY OF RENSSELAER STATE OF NEW YORK

DRAWN BY: BLS
CADD FILE:
CHECKED BY: JOB NO.
DATE: FEBRUARY 15, 2021
SCALE: 1" = 40'
SHEET ESC-4

Phase 1 – Description of Work
For order of work completion please refer to the sequence of construction in the SWPPP
Area of Disturbance – 10.5 +/- Acres
Lots Created - 28

1. Install Road 1 from Upper Mannix Road to Station 11+75
2. Construct mailbox kiosk and turn around
3. Install Road 2 in its entirety
4. Install emergency access to Thompson Hill Road with associated utilities.
5. Install sewer pump station and force main to Thompson Hill Road
6. Install water mains from Tech Valley Drive along Road 1 and 2 as well as the emergency access road to the Thompson Hill Road tie in.
7. Install sewer from SMH-14 to the pump station as well as all sewer within Road 2.
8. Install all storm sewer in Road 2 as well as all storm sewer in Road 1 from Upper Mannix Road to the Road 2 intersection.
9. Install storm water management practices along Road 1 from Upper Mannix Road to Road 2
10. Construct all off site sewer improvements as required in the Engineers Report.
11. Develop lots along the constructed portions of Roads 1 and 2.
12. Install all sidewalks

Phase 2 – Description of Work.
For order of work completion please refer to the sequence of construction in the SWPPP
Area of Disturbance – 16.1 +/- Acres
Lots Created - 40

1. Install Road 1 from Station 11+75 to its terminus
2. Install sanitary sewer from SMH-3 to SMH-14
3. Install water along Road 1 from Station 11+75 to its terminus
4. Install storm sewer and storm water management practices along the balance of Road 1
5. Develop lots along the constructed portions of Roads 1.

Phase 3 – Description of Work.
For order of work completion please refer to the sequence of construction in the SWPPP
Area of Disturbance – 15.4 +/- Acres
Lots Created - 42

1. Install Roads 3, 4 and 5
2. Install sanitary sewer in Roads 3, 4 and 5
3. Install water in Roads 3, 4 and 5
4. Install storm sewer and storm water management practices along Roads 3, 4 and 5
5. Develop lots along Roads 3, 4 and 5
6. Construct flat area for passive park and trail system

NOTE: 48 HOURS PRIOR TO ANY CONSTRUCTION ACTIVITIES, THE CONTRACTOR SHALL CONTACT DIG SAFELY.NY (FORMERLY U.C.I.A.) AT UTILITIES, 1-800-962-7962

NO.	DATE	REVISIONS	BY
4	9/20/21	REVISED AS PER TEC AND E. DEPENDORF COMMENTS	
3	11/30/21	REVISED AS PER CAC AND TOWN OF GREENBUSH COMMENTS	
2	7/27/21	REVISED AS PER TEC COMMENTS DATED 7/9/21	
1	7/27/21		

BRETT L. STEENBURGH, P.E.
N.Y.S. LIC. NO. 075458

APPLICANT:
CLDZ LLC
494 WESTERN TURNPIKE
ALTAMONT, NY 12009

BRETT L. STEENBURGH, P.E. PLLC
2832 Rosendale Road
Niskayuna, NY 12309
(518) 385-0676
steenburghpe@gmail.com
ENGINEERING THAT TRANSFORMS IMAGINATION INTO REALITY
A comprehensive civil engineering firm with a personal touch

PHASING PLAN

CLDZ, LLC
CARVER COURT
TOWN OF EAST GREENBUSH COUNTY OF RENSSELAER STATE OF NEW YORK

DRAWN BY:	BLS	JOB NO.	SCALE: 1" = 100'
CADD FILE:			SHEET P-1
DATE:	FEBRUARY 15, 2021		

ROAD 1

BIORETENTION BASIN #1

100 LF 24" HDPE @ 0.050%

20' WIDE UTILITY EASEMENT

GREENBELT

OCS
RIM
10"
INV.

INV.=357.5

PLUNGE POOL

PLUNGE POOL TO BE LINED WITH GEOTEXTILE FABRIC AND MEDIUM STONE FILL

4' HIGH BLACK CHAIN LINK FENCE

FES-9
SEE END SECTION DETAIL

ATTENUATION BASIN

62LF 24" HDPE @ 3.22%

INV.=410.0

FES
SEE

BIORETENTION BASIN #2

4' HIGH BLACK CHAIN LINK FENCE

PLUNGE POOL

PLUNGE POOL TO BE LINED WITH GEOTEXTILE FABRIC AND MEDIUM STONE FILL

BIORETENTION AREA PLANTING SCHEDULE

SYMBOL	COMMON NAME	SCIENTIFIC NAME	SIZE
	RED MAPLE	ACER RUBRUM	1" CAL.
	BALDCYPRESS	TAXODIUM DISTICHUM	1" CAL
	RED TWIG DOGWOOD	CORNUS STOLONIFERA	BAREROOT
	VIBURNUM	VIBURNUM SPP	BAREROOT
	CARDINAL FLOWER	LOBELIA CARDINALIS	BAREROOT

NOTE: 48 HOURS PRIOR TO ANY CONSTRUCTION ACTIVITIES, THE CONTRACTOR SHALL CONTACT THE U.F.P.O. TO LOCATE ALL UNDERGROUND UTILITIES. 1-800-962-7962

NO.	DATE	REVISIONS	BY
3	10/20/22	REVISED AS PER TDC AND C. GREENBUSH COMMENTS	
2	11/30/21	REVISED AS PER GAC AND GRACE COMMENTS	
1	11/10/21	REVISED AS PER PLANNING BOARD	

BRETT L. STEENBURGH, P.E.
N.Y.S. LIC. NO. 075458

APPLICANT:
CLDZ LLC
494 WESTERN TURNPIKE
ALTAMONT, NY 12009

BRETT L. STEENBURGH, P.E. PLLC
2632 Rosendale Road
Niskayuna, NY 12309
(518) 365-0675
bsteenburghpe@gmail.com

ENGINEERING THAT TRANSFORMS IMAGINATION INTO REALITY
A comprehensive civil engineering firm with a personal touch

BIO-RETENTION LANDSCAPING

CLDZ, LLC
CARVER COURT
TOWN OF EAST GREENBUSH
COUNTY OF RENSSELAER STATE OF NEW YORK

DRAWN BY:	BLS	CHECKED BY:	SCALE: AS NOTED
CAD FILE:		JOB NO.	
DATE:	FEBRUARY 15, 2021		SHEET L-1

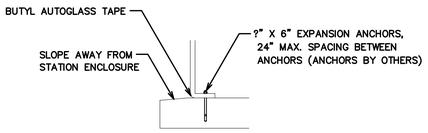

MOUNTING DETAIL
SCALE: NONE

NOTE:

CONCRETE PAD TO BE LEVEL AND FLAT, WITH BROOM FINISH IN ENCLOSURE MOUNTING FLANGE AREA.

SEAL ALL OPENINGS THRU CONCRETE PAD INTO STATION ENCLOSURE GAS TIGHT.

GAS TIGHT FLOOR DRAIN RECOMMENDED FOR PUMP MAINTENANCE.

CONTROL PANEL ATTACHED TO BASE FOR SHIPPING ONLY, FASTENERS TO BE REMOVED AFTER INSTALLATION. PANEL TO BE ANCHORED TO CONCRETE PAD.

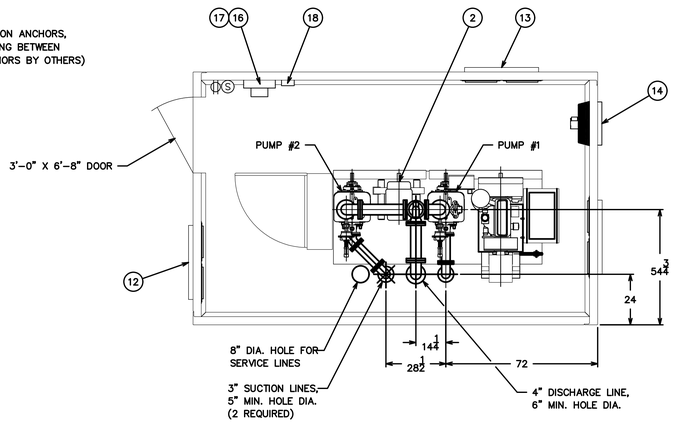

ITEM	DESCRIPTION	MATERIAL & SIZE
1	PUMP	CAST IRON T3–B
2	MOTOR	CAST IRON
3	PUMP & MOTOR BASE ASSY	STEEL
4	BELT GUARD ASSY	STEEL
5	DISCHARGE PLUG VALVE	CAST IRON 4" 3–WAY
6	DISCHARGE CHECK VALVE	CAST IRON 4"
7	AIR RELEASE VALVE	CAST IRON 1" (SHIPPED LOOSE)
8	CONTROL PANEL	STAINLESS STEEL
9	ENGINE	LIQUID COOLED
10	EXHAUST SILENCER	STAINLESS STEEL
11	STATION ENCLOSURE	FIBERGLASS 10' X 16'
12	INTAKE VENT ASSY	ALUMINUM (4 SHUTTERS)
13	EXHAUST VENT ASSY	ALUMINUM (4 SHUTTERS)
14	EXHAUST FAN ASSY	1850 CFM
15	FLUORESCENT LIGHT FIXTURE	64 WATT FIXTURE
16	LOAD CENTER	STEEL 16 POSITION
17	TRANSFORMER	5 KVA
18	FAN THERMOSTAT	40–100°

Ⓢ LIGHT SWITCH

⦶ 120V, 15 AMP DUPLEX GFI RECEPTACLE

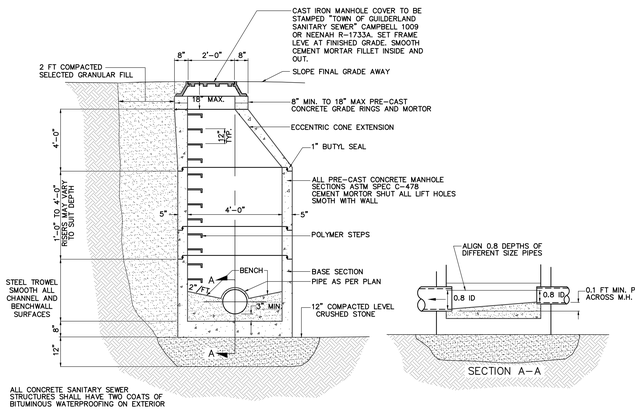

TYPICAL PRE–CAST CONCRETE MANHOLE
(NOT TO SCALE)

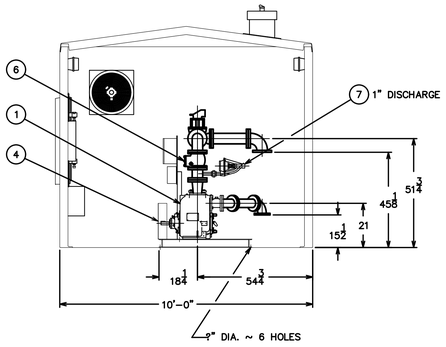

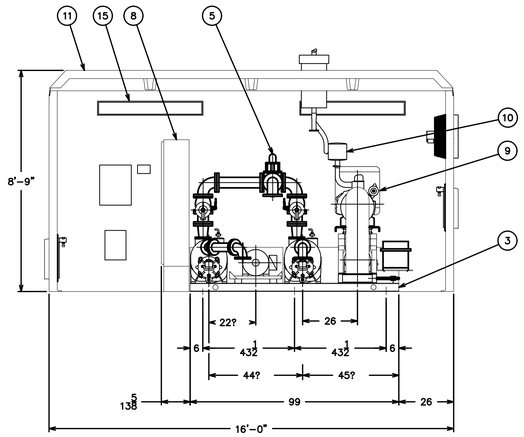

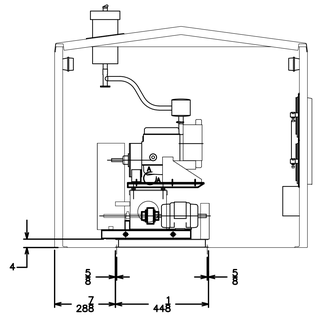

STANDBY PUMP UNIT
RIGHT HAND DRIVE UNIT
T3–B, 3" X 4" X 4"
WITH 10' X 16' FIBERGLASS ENCLOSURE

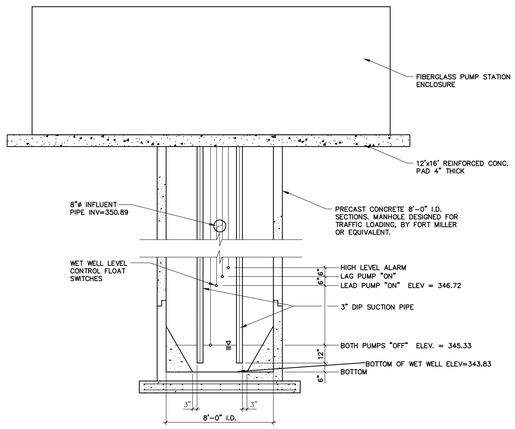

WET WELL DETAIL
N.T.S.

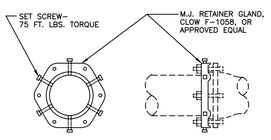

RETAINER GLAND
N.T.S.

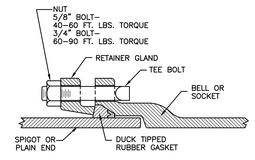

MECHANICAL JOINT (M.J.)
N.T.S.

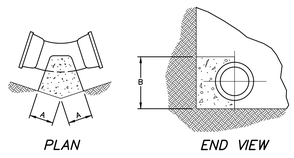

TABLE #1

PIPE SIZE	"A"	"B"
6"–8"	6"	16"
10"–12"	10"	24"
14"–16"	16"	32"
18"–20"	18"	36"
24"	24"	42"

45° BEND ANCHOR (HORIZONTAL)
N.T.S.

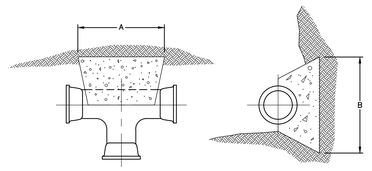

PIPE SIZE	"A"	"B"
6"–8"	14"	16"
10"–12"	18"	24"
14"–16"	48"	32"
18"–20"	60"	40"
24"	72"	48"

TEE ANCHOR
N.T.S.

SAFE BEARING LOADS OF SOILS AND MULTIPLICATION FACTORS FOR MODIFICATION OF THRUST BLOCK AREAS.

SOIL	SAFE BEARING LOAD (p.s.f.)	FACTOR
MUCK PEAT	0	*
SOFT CLAY	500	4.00
SAND	1,000	2.00
SAND & GRAVEL	1,500	1.33
SAND & GRAVEL CEMENTED w/CLAY	2,000	1.00
SHALE	5,000	0.40

*THRUST RETAINED BY WEIGHT OF ANCHORAGE, TIES, RODS, PILES, OR REMOVAL OF MUCK OR PEAT AND REPLACEMENT WITH MATERIALS OF SUITABLE STABILITY TO PROVIDE FIRM BEARING.

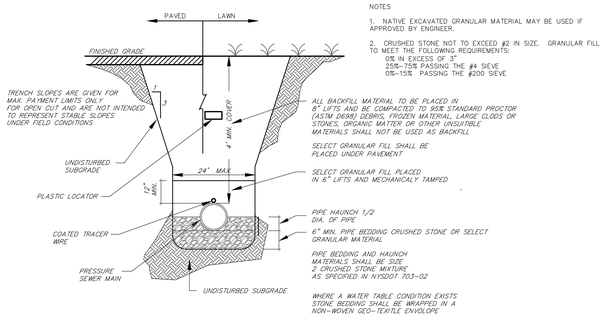

PRESSURE SEWER BEDDING AND BACKFILL DETAIL – DIRECT BURIAL
NOT TO SCALE

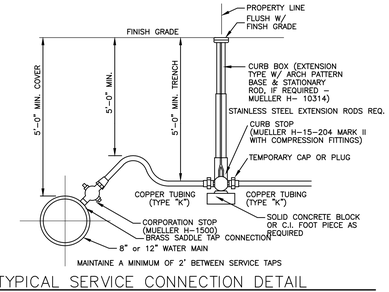

TYPICAL SERVICE CONNECTION DETAIL
N.T.S.

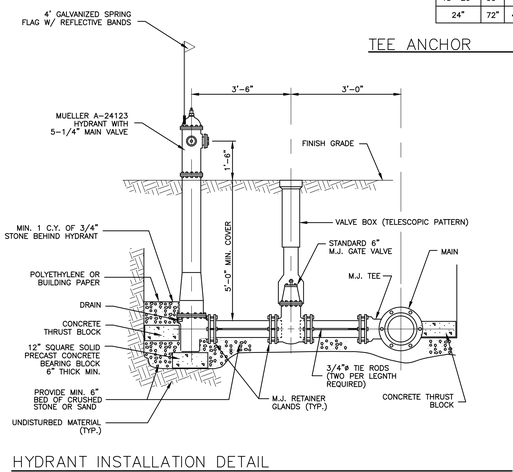

HYDRANT INSTALLATION DETAIL
N.T.S.

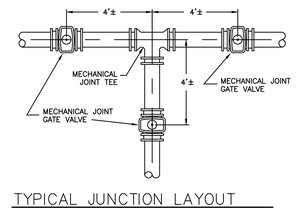

TYPICAL JUNCTION LAYOUT
N.T.S.

NOTE: 48 HOURS PRIOR TO ANY CONSTRUCTION ACTIVITIES, THE CONTRACTOR SHALL CONTACT THE UTILITY LOCATING SERVICE AT 1–800–962–7962 FOR LOCATION OF UNDERGROUND UTILITIES.

NO.	DATE	DESCRIPTION
3	01/27/21	REVISED AS PER TDK AND T. GROSSKOPF COMMENTS
2	01/20/21	REVISED AS PER TDK COMMENTS DATED 1/8/21
1	1/07/21	REVISED AS PER TDE COMMENTS DATED 7/8/21

BRETT L. STEENBURGH, P.E.
N.Y.S. LIC. NO. 075458

APPLICANT:
CLDZ LLC
494 WESTERN TURNPIKE
ALTAMONT, NY 12009

BRETT L. STEENBURGH, P.E. PLLC
2832 Rosendale Road
Niskayuna, NY 12309
(518) 385–0656
steenburghpe@gmail.com
ENGINEERING THAT TRANSFORMS IMAGINATION INTO REALITY
with a personal touch
A comprehensive civil engineering firm

DETAILS
CLDZ, LLC
CARVER COURT
TOWN OF EAST GREENBUSH
COUNTY OF RENSSELAER STATE OF NEW YORK

DRAWN BY:	BLS	JOB NO.	SCALE: AS NOTED
CADD FILE:			SHEET DET–1
DATE:	FEBRUARY 15, 2021		

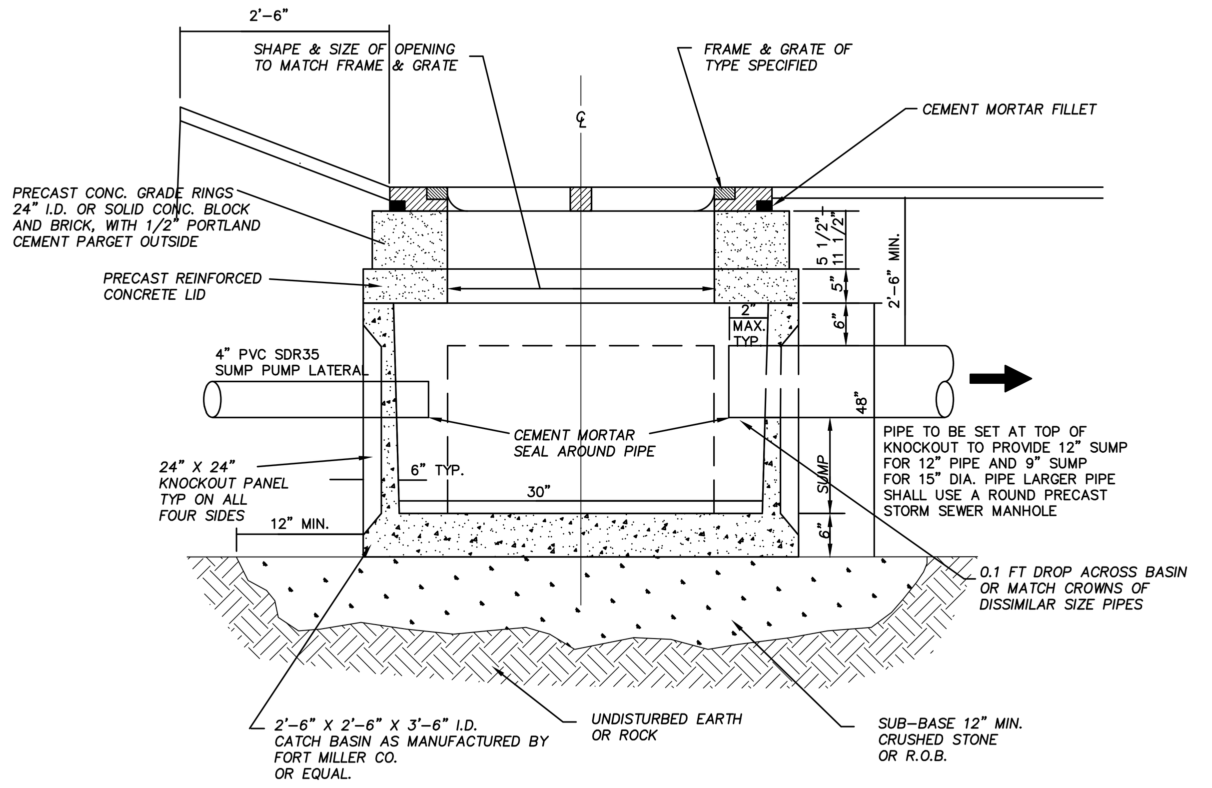

STANDARD SQUARE PRECAST CONCRETE CATCH BASIN

N.T.S.

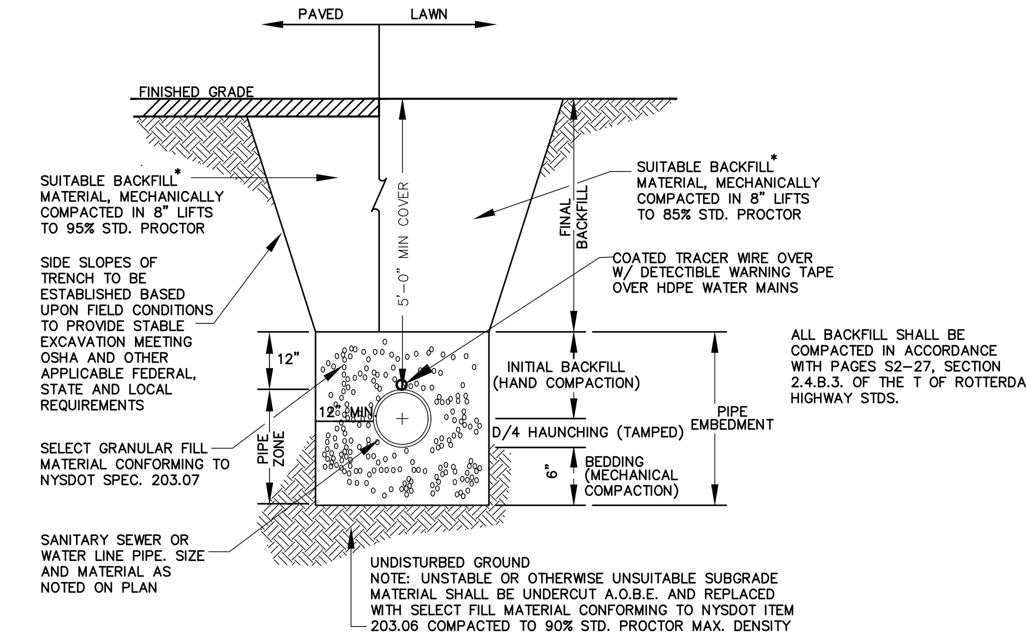

SANITARY SEWER & WATER LINE TRENCH AND BACKFILL DETAIL

NOT TO SCALE

* NOTE

SUITABLE BACKFILL MATERIAL FOR FINAL BACKFILL SHALL BE FREE OF DEBRIS, FOREIGN MATERIAL, LARGE STONES, TREES, ORGANIC MATTER AND OTHER DELETERIOUS MATER AND CONFORMS WITH ASTM D 2487 SOIL GROUPS GW, GP, GM, SM, SW, AND SP.

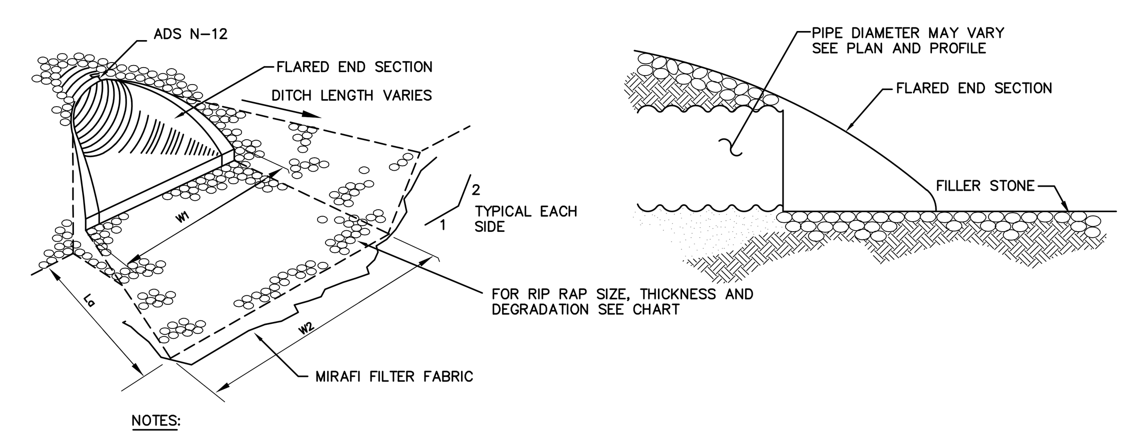

NOTES:
1) GRADE DITCH INVERT AS SHOWN ON PLANS AND OR PROFILES AS DIRECTED.
2) FIELD CONDITIONS AT THE TIME OF CONSTRUCTION SHALL DETERMINE THE USE OF FILTER FABRIC.

FLARED END SECTION

N.T.S.

Finished End Section	Pipe Size (in)	Invert Elev.	W1 (ft)	W2 (ft)	La (ft)	Fill Type
FES-1	12	421.43	2	4	4	Medium Stone Fill
FES-2	18	419.91	3	6	6	Medium Stone Fill
FES-3	24	410	4	8	8	Medium Stone Fill
FES-4	30	382.93	5	8	8	Medium Stone Fill
FES-5	24	370	4	6	6	Medium Stone Fill
FES-6	12	373.42	2	4	4	Medium Stone Fill
FES-7	12	367.12	2	4	4	Medium Stone Fill
FES-8	18	367.96	3	6	6	Medium Stone Fill
FES-9	24	363.83	4	8	8	Medium Stone Fill
FES-10	24	357.5	4	6	6	Medium Stone Fill
FES-11	12	354.2	2	4	4	Medium Stone Fill
FES-12	12	346.44	2	4	4	Medium Stone Fill

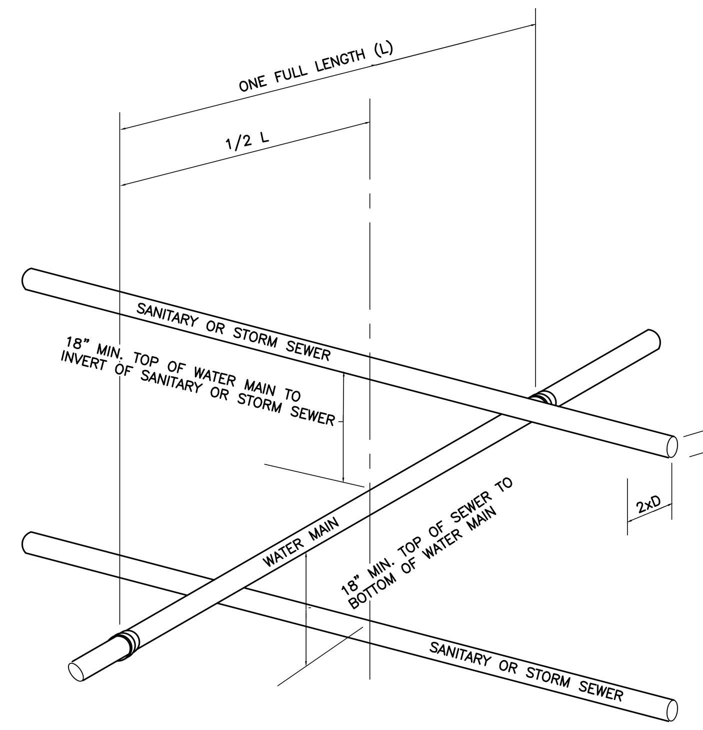

VERTICAL PIPE CROSSING DETAIL
(NOT TO SCALE)

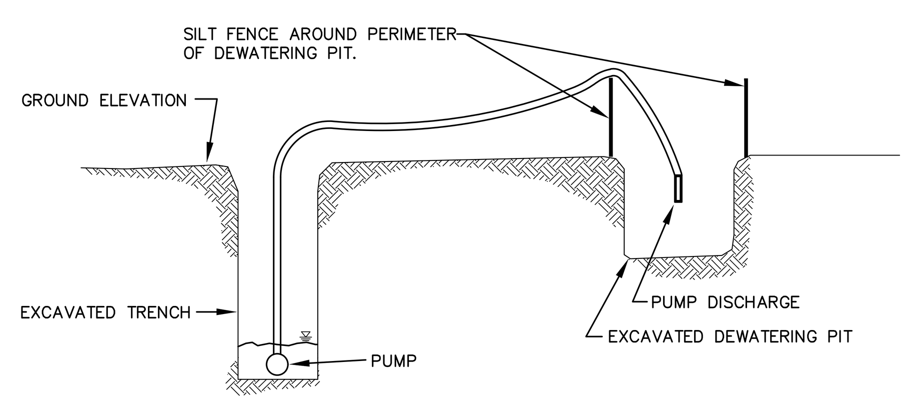

TYPICAL DEWATERING DETAIL

N.T.S.

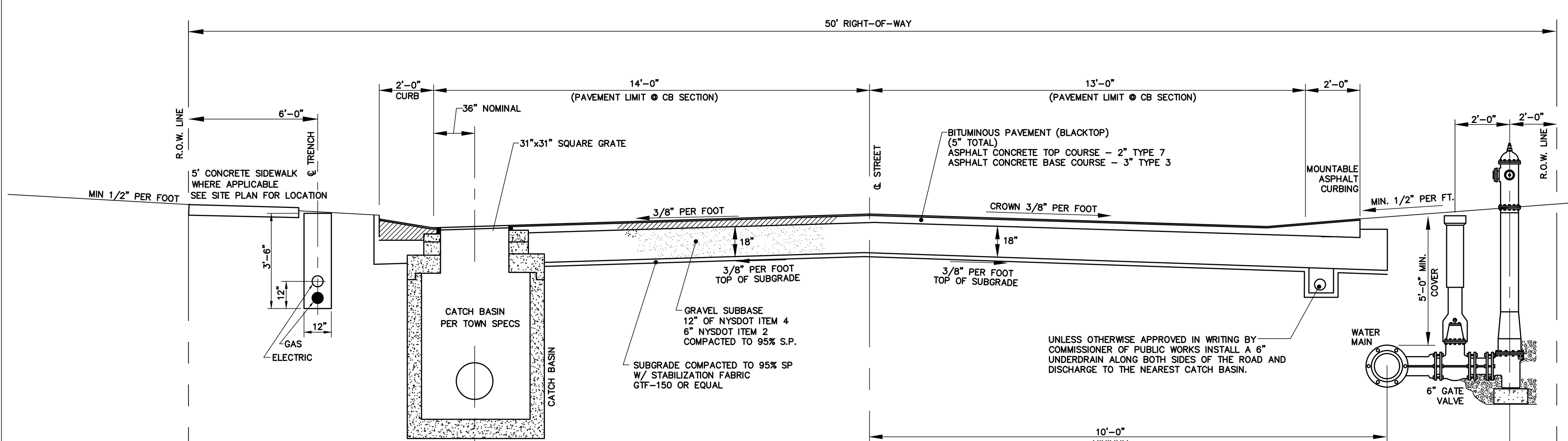

NOTES:

1. ALL SUBGRADE MUST BE INSPECTED BY THE COMMISSIONER OF PUBLIC WORKS AND TOWN ENGINEER PRIOR TO INSTALLATION OF SUBBASE
2. ALL PAVEMENT AND GRAVEL BASES, SUBBASE AND EXISTING UNDISTURBED MATERIAL SHALL BE GRADED TO MATCH THE FINAL PAVEMENT CROSS SLOPE
3. ALL TRENCHES WITHIN ROADWAY LIMITS SHALL BE COMPACTED TO 95% STANDARD PROCTOR. COMPACTION TESTS SHALL BE PERFORMED AT EVEN DEPTH INCREMENTS (2, 4, 6 ETC) ABOVE THE TOP OF THE PIPE MEASURED AT INTERVALS OF EVEN FEET.

ROAD SECTION

N.T.S.

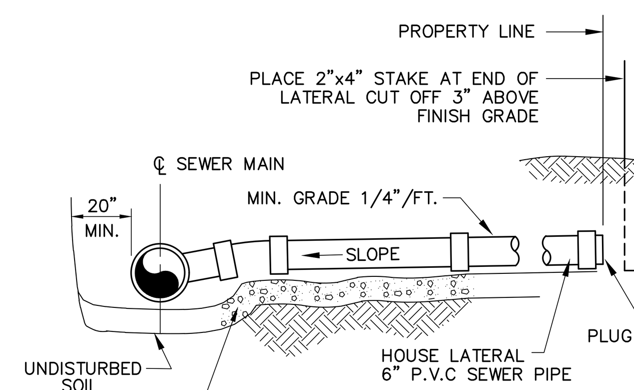

SECTION ELEVATION
NOT TO SCALE

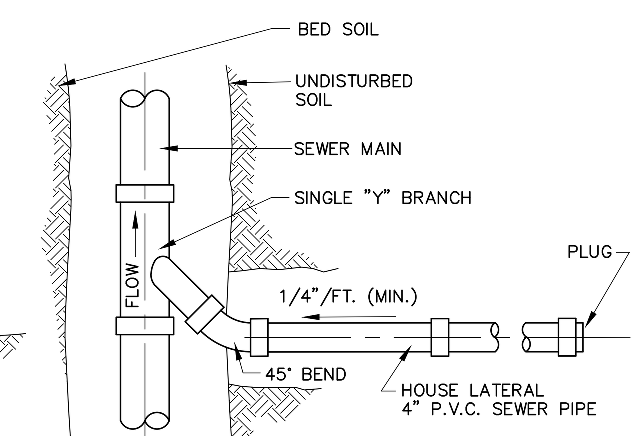

PLAN
NOT TO SCALE

NOTES
1. THE SEWER AND WATER LINES HAVE MINIMUM INVERT SEPERATIONS OF 10 FEET HORIZONTAL AND 18 INCHES VERTICAL.
2. ALL CROSSINGS OF THE SEWER AND STORM WATER SYSTEM THAT HAVE A VERTICALSEPERATION OF LESS THAN 18 INCHES WILL HAVE THE LOWER PIPE PLACED IN A SLEEVE AND BACKFILLED WITH A HIGH SLUMP PORTLAND CEMENT CONCRETE.

STERILIZATION AND TESTING

(SCHENECTADY COUNTY HEALTH DEPARTMENT TO BE NOTIFIED AND HAVE REPRESENTATIVE PRESENT DURING CHLORINATION)

CHLORINATION
MAINS TO BE FLUSHED AND CHLORINATED, A CHLORINE RESIDUAL OF NOT LESS THAN 50 ppM SHALL BE MAINTAINED FOR 24 HRS.

PRESSURE TESTING
MAINS TO BE TESTED AT 200PSI PRESSURE AT WHICH PRESSURE IT SHALL NOT LOSE MORE THAN 1.3 GALLONS OF WATER PER 1000 FEET.

SEWER HOUSE CONNECTION

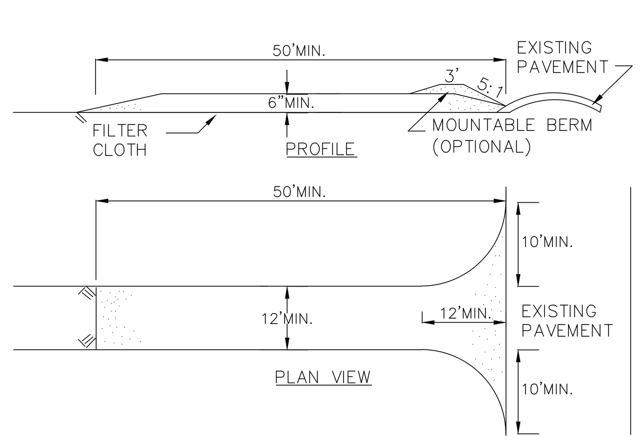

CONSTRUCTION SPECIFICATIONS

1. STONE SIZE – USE 2" STONE, OR RECLAIMED OR RECYCLED CONCRETE EQUIVALENT.
2. LENGTH – NOT LESS THAN 50 FEET (EXCEPT ON A SINGLE RESIDENCE LOT WHERE A 30 FOOT MINIMUM LENGTH WOULD APPLY).
3. THICKNESS – NOT LESS THAN SIX (6) INCHES.
4. WIDTH – TWELVE (12) FOOT MINIMUM, BUT NOT LESS THAN THE FULL WIDTH AT POINTS WHERE INGRESS OR EGRESS OCCURS. TWENTY-FOUR (24) FOOT IF SINGLE ENTRANCE TO SITE.
5. FILTER CLOTH – WILL BE PLACED OVER THE ENTIRE AREA PRIOR TO PLACING
6. SURFACE WATER – ALL SURFACE WATER FLOWING OR DIVERTED TOWARD CONSTRUCTION ENTRANCES SHALL BE PIPED ACROSS THE ENTRANCE. IF PIPING IS IMPRACTICAL, A MOUNTABLE BERM WITH 5:1 SLOPES WILL BE PERMITTED.
7. MAINTENANCE – THE ENTRANCE SHALL BE MAINTAINED IN A CONDITION WHICH WILL PREVENT TRACKING OR FLOWING OF SEDIMENT ONTO PUBLIC RIGHTS-OF-WAY, ALL SEDIMENT SPILLED, DROPPED, WASHED OR TRACTED ONTO PUBLIC RIGHTS-OF-WAY MUST BE REMOVED IMMEDIATELY.
8. WHEN WASHING IS REQUIRED, IT SHALL BE DONE ON A AREA STABILIZED WITH STONE AND WHICH DRAINS INTO AN APPROVED SEDIMENT TRAPPING DEVICE.
9. PERIODIC INSPECTION AND NEEDED MAINTENANCE SHALL BE PROVIDED AFTER EACH

STABILIZED CONSTRUCTION ENTRANCE DETAIL
(NOT TO SCALE)

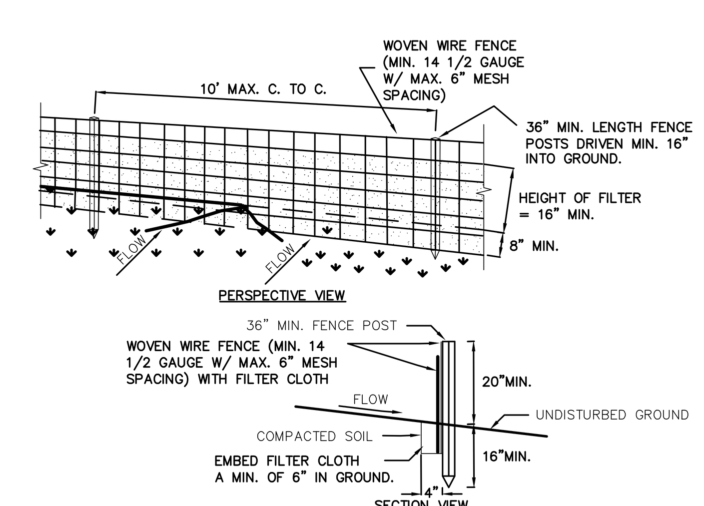

CONSTRUCTION SPECIFICATIONS

1. WOVEN WIRE FENCE TO BE FASTENED SECURELY TO FENCE POSTS WITH WIRE TIES OR STAPLES. POSTS SHALL BE STEEL EITHER "T" OR "U" TYPE OR HARDWOOD.
2. FILTER CLOTH TO BE TO BE FASTENED SECURELY TO WOVEN WIRE FENCE WITH TIES SPACED EVERY 24" AT TOP AND MID SECTION. FENCE SHALL BE WOVEN WIRE, 12 1/2 GAUGE, 6" MAXIMUM MESH OPENING.
3. WHEN TWO SECTIONS OF FILTER CLOTH ADJOIN EACH OTHER THEY SHALL BE OVER-LAPPED BY SIX INCHES AND FOLDED. FILTER CLOTH SHALL BE EITHER FILTER X, MIRAFI 100X, STABILINKA T140N, OR APPROVED EQUIVALENT.
4. PREFABRICATED UNITS SHALL BE GEOFAB, ENVIROFENCE, OR APPROVED EQUIVALENT.
5. MAINTENANCE SHALL BE PERFORMED AS NEEDED AND MATERIAL REMOVED WHEN "BULGES" DEVELOP IN THE SILT FENCE.

SILT FENCE DETAIL
(NOT TO SCALE)

MAINTENANCE

1. SEDIMENT SHALL BE REMOVED FROM SEDIMENT TRAPS WHENEVER THEIR CAPACITY HAS BEEN REDUCED BY 50%.
2. ALL EROSION AND SEDIMENT CONTROL DEVICES SHALL BE INSPECTED WITHIN 24 HOURS OF A STORM EVENT BY THE SITE CONTRACTOR AND REPAIRED AND/OR MODIFIED AS REQUIRED TO BE GOOD WORKABLE CONDITION.
3. THE CONTRACTOR SHALL CONDUCT AN INSPECTION OF THE SITE ON A DAILY BASIS TO COLLECT LITTER AND CONSTRUCTION DEBRIS AND DISPOSE OF LEGALLY.
4. ANY STOCKPILES OF FILL, TOPSOIL, EXCAVATED MATERIAL SHALL BE COVERED OR CONTAINED BY SEDIMENT CONTROL FENCE TO PREVENT EROSION.

GENERAL E & SC NOTES;

1. NO MATERIAL AND/OR EQUIPMENT SHALL BE STOCKPILED OR STORED IN THE LOCATION OF THE SEPTIC FIELDS.
2. IT IS ASSUMED THAT DUE TO THE HIGH PERMIABILITY OF THE ON SITE SOILS NO SEDIMENT BASINS SHALL BE REQUIRED; HOWEVER, IF SEDIMENT BASINS ARE ARE DEEMED NECESSARY DURING CONSTRUCTION, THEY SHALL BE CONSTRUCTED IN ACCORDANCE WITH THE NYS GUIDELINES FOR EROSION AND SEDIMENT CONTROL.

S.W.P.P.P. REQUIREMENTS

1. THE CONTRACTOR UNDERTAKING SITE CONSTRUCTION OF THIS PROJECT MUST SIGN THE CERTIFICATION IN THE SWPPP AND BE FAMILIAR WITH ALL REQUIREMENTS OF THE SWPPP AND REQUIREMENTS OF THE NYS DEC SPDES GENERAL PERMIT FOR STORMWATER DISCHARGES FROM CONSTRUCTION ACTIVITY – PERMIT No.-GP-0-15-002.
2. THE CONTRACTOR MUST IS RESPONSIBLE TO COMPLY WITH THE TERMS OF THE NYS DEC SPDES GENERAL PERMIT FOR STORMWATER DISCHARGES FROM CONSTRUCTION ACTIVITY – PERMIT No. GP-0-15-002. COPIES OF THE GENERAL PERMIT ARE AVAILABLE BY CALLING DEC (518) 402-8109 AND ON LINE. ADDITIONALLY, THE CONTRACTOR SHALL COMPLY WITH ALL TOWN OF BETHLEHEM MS4 REGULATIONS.
3. A NOTICE OF INTENT (NOI) MUST BE SUBMITTED TO DEC PRIOR TO INITIATING WORK.
4. THE SWPPP INCLUDES INFORMATION ON ALL DRAWINGS AND THE STORMWATER POLLUTION PREVENTION PLAN

5. PRIOR TO COMMENCEMENT OF CONSTRUCTION, THE CONTRACTOR SHALL HAVE THE ENGINEER CONDUCT AN ASSESSMENT OF THE SITE AND CERTIFY IN AN INSPECTION REPORT THAT THE APPROPRIATE EROSION AND SEDIMENT CONTROLS HAVE BEEN ADEQUATELY INSTALLED. FOLLOWING COMMENCEMENT OF CONSTRUCTION, THE ENGINEER SHALL MAKE SITE INSPECTIONS EVERY 7 DAYS. AS REQUIRED BY THE GP-0-15-002.
6. THE CONTRACTOR SHALL MAINTAIN A RECORD OF ALL INSPECTION REPORTS IN A SITE LOG BOOK, MAINTAINED ON SITE AND AVAILABLE TO THE PERMITTING AUTHORITY UPON REQUEST.
7. AT COMPLETION OF CONSTRUCTION, THE CONTRACTOR SHALL PERFORM A FINAL INSPECTION TO CERTIFY THAT THE SITE HAS UNDERGONE FINAL STABILIZATION AND THAT ALL TEMPORARY EROSION AND SEDIMENTATION CONTROLS HAVE BEEN REMOVED. UPON CERTIFICATION OF COMPLETION A NOTICE OF TERMINATION (NOT) SHALL BE SUBMITTED TO NYS DEC.
8. ALL SLOPES STEEPER THAN A 1V:4H SHALL BE STABILIZED WITH SEED, FERTILIZER AND A ROLLED EROSION CONTROL BLANKET.
9. ALL SLOPES LESS THAN A 1V:4H SHALL BE STABILIZED WITH SEED, FERTILIZER AND MULCH
10. ALL SEED, MULCH AND FERTILIZER APPLICATION RATES SHALL BE IN ACCORDANCE WITH THE NEW YORK STATE STANDARDS AND SPECIFICATIONS FOR EROSION AND SEDIMENT CONTROL "THE BLUE BOOK". AND SHALL PREPARE A REPORT
11. ALL WORK PERFORMED ON THE SITE SHALL BE IN ACCORDANCE WITH THE NEW YORK STATE STANDARDS AND SPECIFICATIONS FOR EROSION AND SEDIMENT CONTROL "THE BLUE BOOK".
12. ALL WORK PERFORMED IN ACCORDANCE WITH THE SWPPP.
13. PROJECT CONSTRUCTION SHALL BE PHASED SUCH THAT SOIL DISTURBANCE SHALL NOT EXCEED FIVE (5.0) ACRES AT A TIME.
14. THE OWNER AND APPLICANT ACKNOWLEDGE THAT THE PROPOSED PRIVATELY OWNED AND MAINTANED STORM SEWER SYSTEM WAS DESIGNED BY THEIR ENGINEER TO CONVEY THE 10 YEAR STORM EVENT AND PERIODIC PONDING OF STORMWATER WILL OCCASIONALLY OCCUR ON THE SITE. THE TOWN OF BETHLEHEM AND TOWN DESIGNATED ENGINEER SHALL BE HELD HARMLESS FOR THIS DESIGN OR CONDITION.
15. DUE TO THE SMALL DRAINAGE AREA AND HIGHLY PERMEABLE SOILS ON SITE, IT HAS BEEN DETERMINED THAT SEDIMENT BASINS ARE NOT REQUIRED; HOWEVER, IF A SEDIMENT BASIN IS CONSTRUCTED IT SHALL BE CONSTRUCTED IN ACCORDANCE WITH THE NYSDEC STANDARDS FOR EROSION AND SEDIMENT CONTROLS. (BLUE BOOK)

NOTE: 48 HOURS PRIOR TO ANY CONSTRUCTION ACTIVITIES, THE CONTRACTOR SHALL CONTACT THE U.F.P.O. TO LOCATE ALL UNDERGROUND UTILITIES. 1-800-962-7962

NO.	DATE:	REVISIONS	BY:
3	01/25/22	REVISED AS PER TDE AND E. GREENBUSH COMMENTS	
2	11/03/21	REVISED AS PER CAC AND USACOE COMMENTS	
1	7/27/21	REVISED AS PER TDE COMMENTS DATED 7/8/21	

BRETT L. STEENBURGH, P.E.
N.Y.S. LIC. NO. 075458

BRETT L. STEENBURGH, P.E. PLLC
2832 Rosendale Road
Niskayuna, NY 12309
(518) 365-0675
bsteenburghpe@gmail.com
ENGINEERING THAT TRANSFORMS IMAGINATION INTO REALITY
A comprehensive civil engineering firm with a personal touch

APPLICANT:
CLDZ LLC
494 WESTERN TURNPIKE
ALTAMONT, NY 12009

DETAILS
CLDZ, LLC
CARVER COURT
TOWN OF EAST GREENBUSH
COUNTY OF RENSSELAER STATE OF NEW YORK

DRAWN BY: BLS
CADD FILE:
CHECKED BY:
JOB NO.
DATE: FEBRUARY 15, 2021
SCALE: AS NOTED
SHEET DET-2

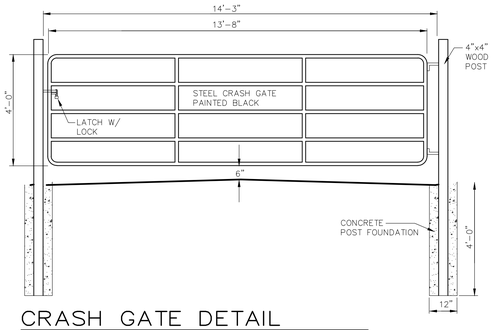

CRASH GATE DETAIL

N.T.S.

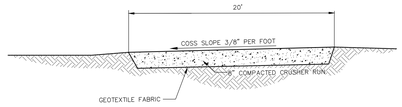

EMERGENCY ACCESS ROAD – CRUSHED STONE

N.T.S.

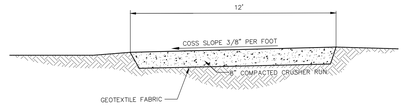

POND ACCESS ROAD – CRUSHED STONE

N.T.S.

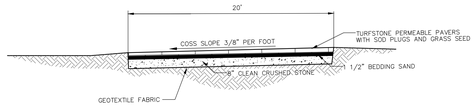

EMERGENCY ACCESS ROAD – GRASS BLOCK

N.T.S.

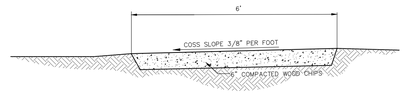

TRAIL CONSTRUCTION DETAIL

N.T.S.

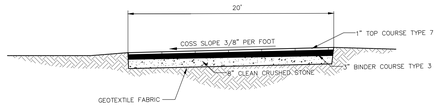

EMERGENCY ACCESS ROAD – PAVED SECTION

N.T.S.

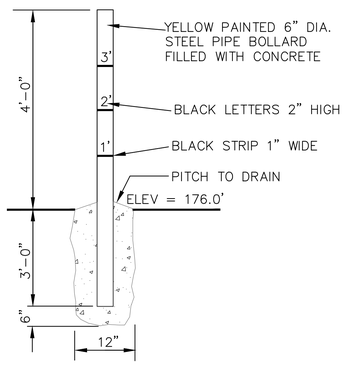

SEDIMENT MARKER DETAIL

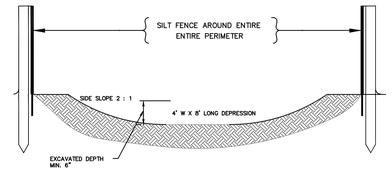

EXCAVATED
CONCRETE WASHOUT AREA

SCALE: N.T.S.

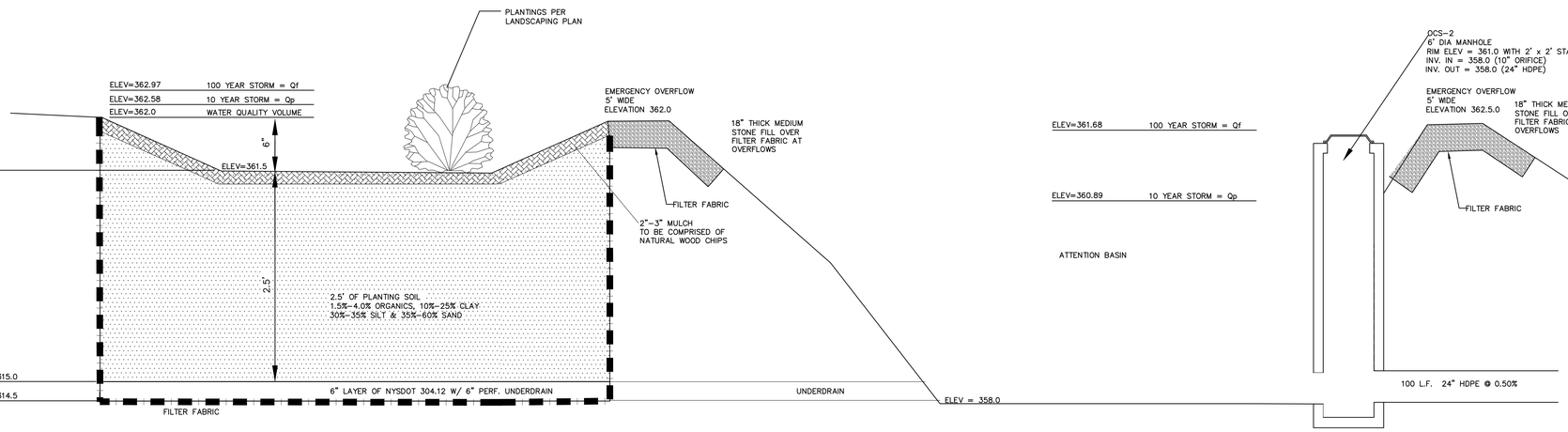

BIORETENTION BASIN #1

N.T.S.

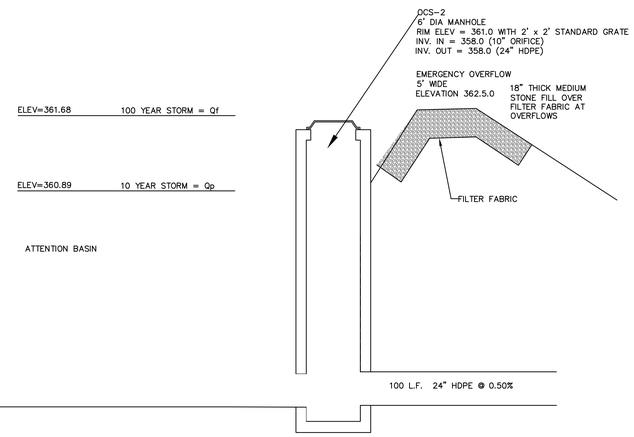

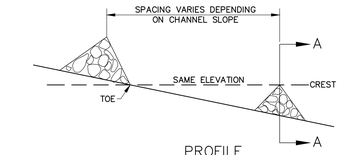

PROFILE

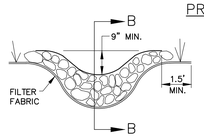

SECTION A–A

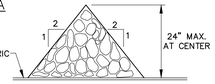

SECTION B–B

CONSTRUCTION SPECIFICATIONS

1. STONE WILL BE PLACED ON A FILTER FABRIC FOUNDATION TO THE LINES, GRADES AND LOCATIONS SHOWN IN THE PLAN.
2. SET SPACING OF CHECK DAMS TO ASSUME THAT THE ELEVATIONS OF THE CREST OF THE DOWNSTREAM DAM IS AT THE SAME ELEVATION OF THE TOE OF THE UPSTREAM DAM.
3. EXTEND THE STONE A MINIMUM OF 1.5 FEET BEYOND THE DITCH BANKS TO PREVENT CUTTING AROUND THE DAM.
4. PROTECT THE CHANNEL DOWNSTREAM OF THE LOWEST CHECK DAM FROM SCOUR AND EROSION WITH STONE OR LINER AS APPROPRIATE.
5. ENSURE THAT CHANNEL APPURTENANCES SUCH AS CULVERT ENTRANCES BELOW CHECK DAMS ARE NOT SUBJECT TO DAMAGE OR BLOCKAGE FROM DISPLACED STONES.

CHECK DAM DETAILS

NOT TO SCALE

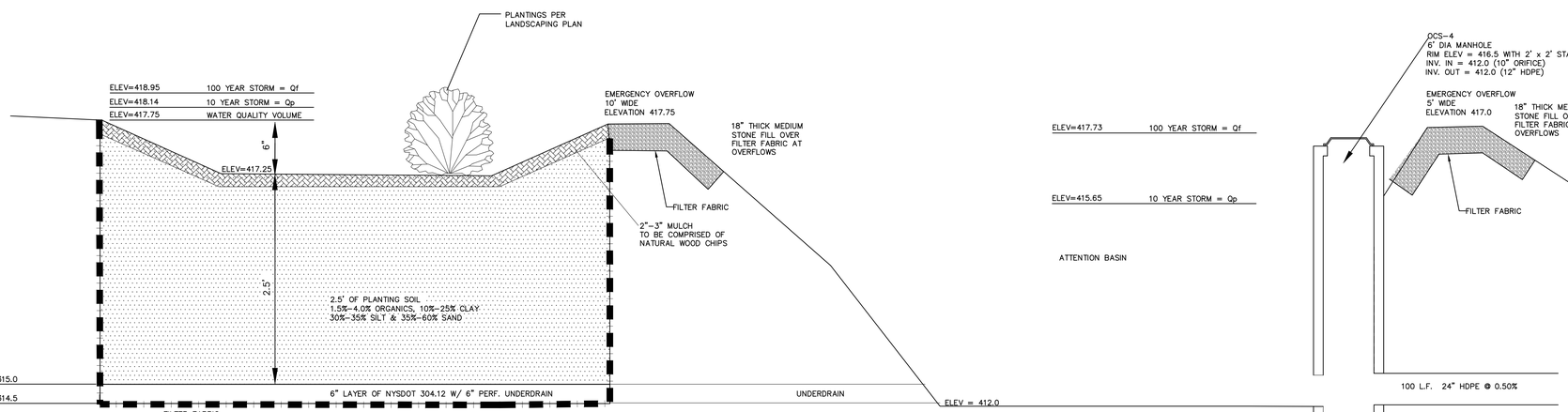

BIORETENTION BASIN #2

N.T.S.

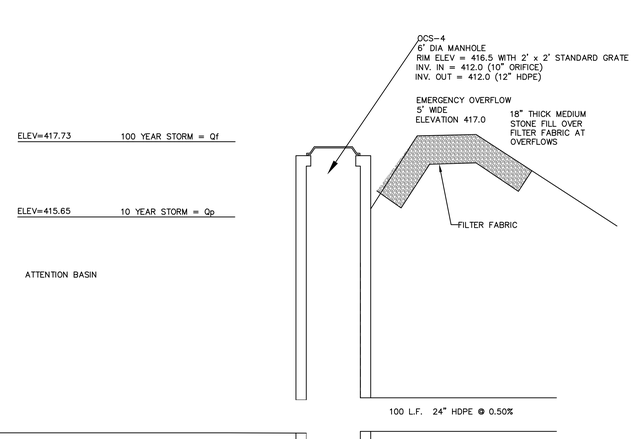

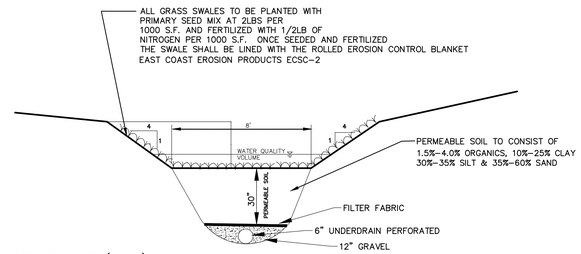

DRY SWALE (O-1)

N.T.S.

NOTE: 48 HOURS PRIOR TO ANY CONSTRUCTION ACTIVITIES, THE CONTRACTOR SHALL CONTACT THE U.F.P.O. TO LOCATE ALL UNDERGROUND UTILITIES. 1-800-962-7962

NO.	DATE	REVISION
3	9/05/21	REVISED AS PER TOE AND E. GREENBUSH COMMENTS
2	11/03/21	REVISED AS PER DAC AND ECSCOE COMMENTS
1	1/27/21	REVISED AS PER THE COMMENTS DATED 7/9/21

BRETT L. STEENBURGH, P.E.
N.Y.S. LIC. AND D.P.E.

APPLICANT:
CLDZ LLC
494 WESTERN TURNPIKE
ALTAMONT, NY 12009

BRETT L. STEENBURGH, P.E. PLLC
2832 Rosendale Road
Niskayuna, NY 12309
(518) 355-0818
bsteenburghpe@gmail.com
ENGINEERING THAT TRANSFORMS IMAGINATION INTO REALITY
A comprehensive civil engineering firm with a personal touch

DETAILS
CLDZ, LLC
CARVER COURT
TOWN OF EAST GREENBUSH
COUNTY OF RENSSELAER STATE OF NEW YORK

DRAWN BY:	BLS	CHECKED BY:	SCALE: AS NOTED
CADD FILE:		JOB NO.	SHEET DET-3
DATE:	FEBRUARY 15, 2021		

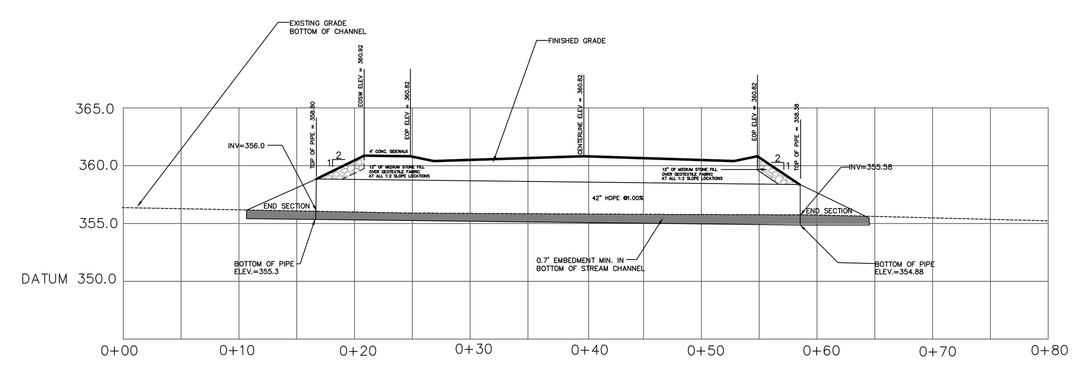

CULVERT CROSS SECTION – ROAD 1 STATION 5+00±
SCALE 1" = 10'
WETLAND CROSSING A

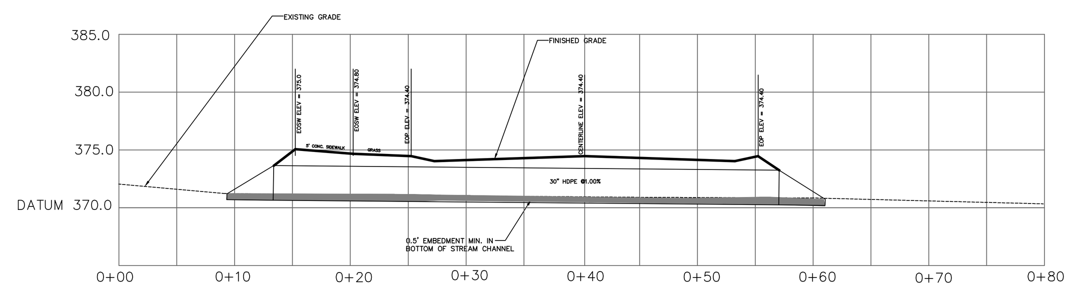

ROAD 1 STATION 13+50±
SCALE 1" = 10'
WETLAND CROSSING B

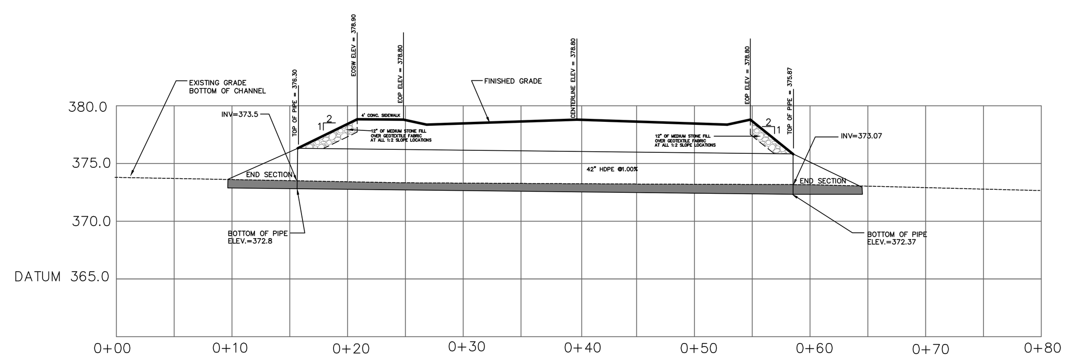

CULVERT CROSS SECTION – ROAD 1 STATION 16+60±
SCALE 1" = 10'
WETLAND CROSSING C

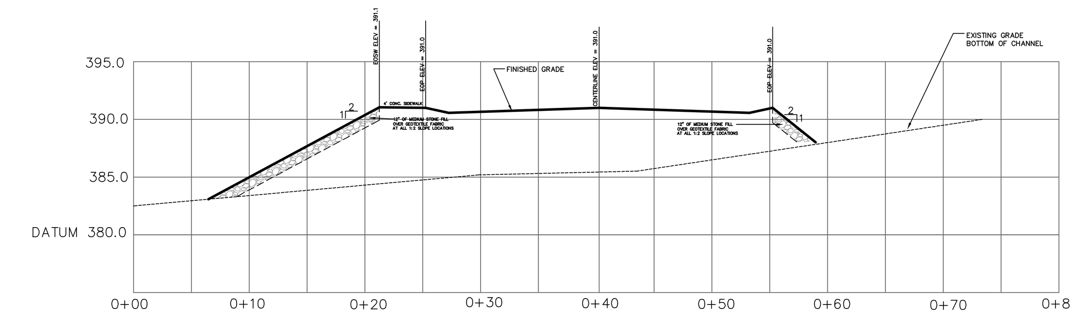

ROAD 1 STATION 20+88±
SCALE 1" = 10'
WETLAND CROSSING D

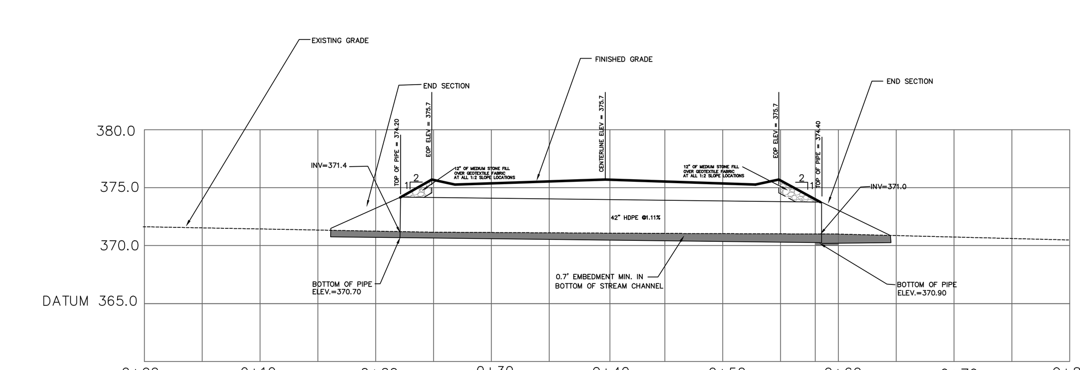

CULVERT CROSS SECTION – ROAD 2 STATION 0+68±
SCALE 1" = 10'
WETLAND CROSSING E

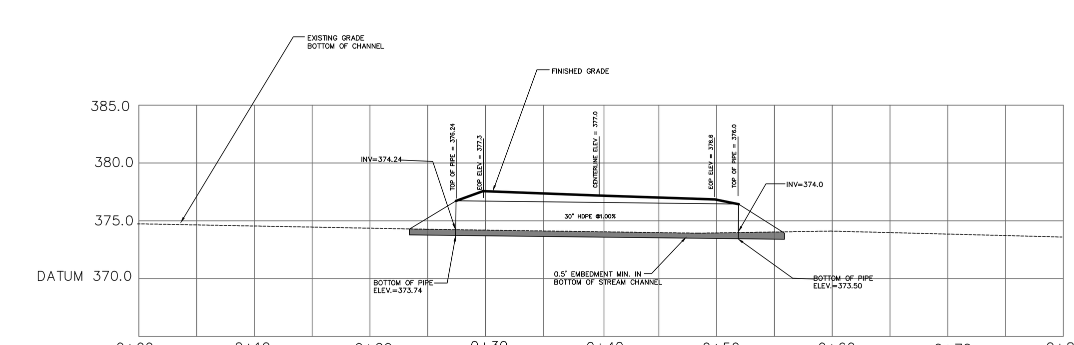

CULVERT CROSS SECTION – EMERGENCY ACCESS ROAD
SCALE 1" = 10'
WETLAND CROSSING F

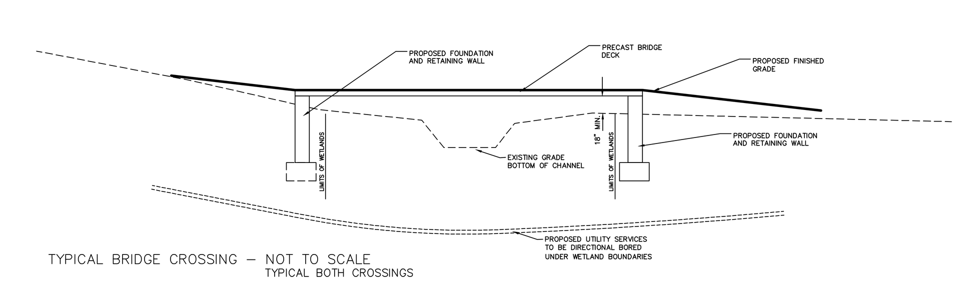

TYPICAL BRIDGE CROSSING – NOT TO SCALE
TYPICAL BOTH CROSSINGS

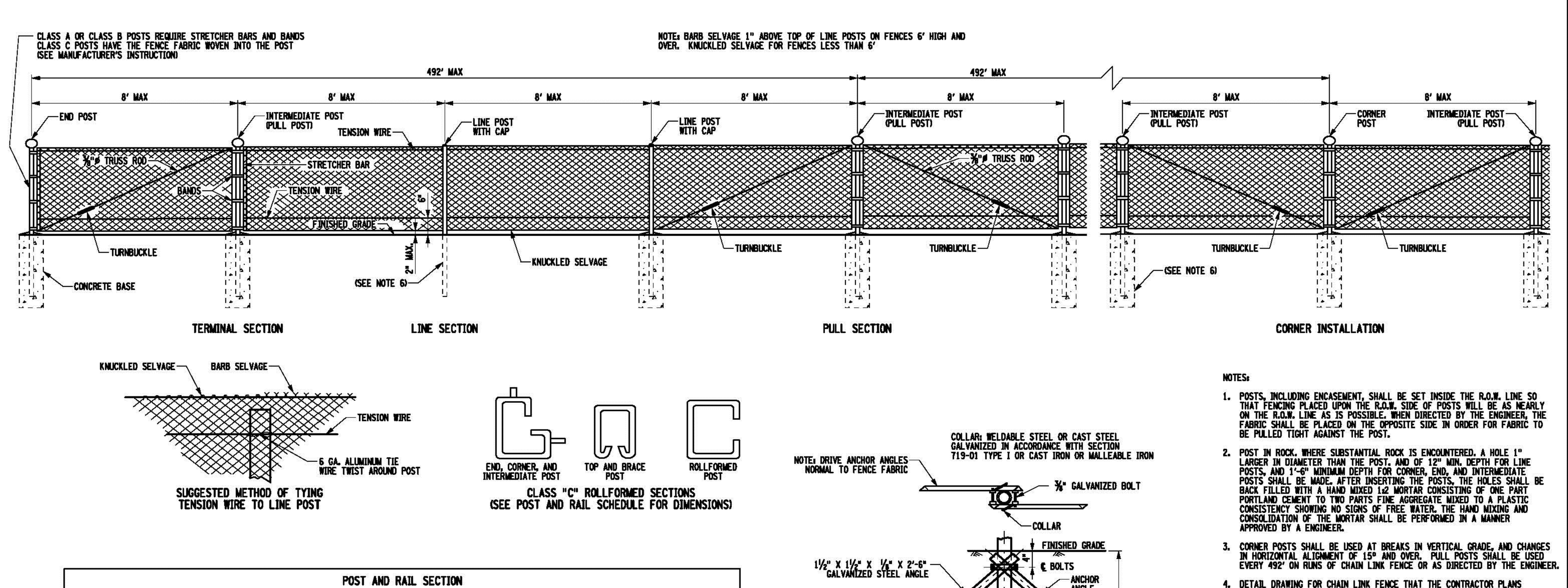

NOTES:
1. POSTS, INCLUDING ENCASEMENT, SHALL BE SET INSIDE THE R.O.W. LINE SO THAT FENCING PLACED UPON THE R.O.W. SIDE OF POSTS WILL BE AS NEARLY ON THE R.O.W. LINE AS IS POSSIBLE. WHEN DIRECTED BY THE ENGINEER, THE FABRIC SHALL BE PLACED ON THE OPPOSITE SIDE IN ORDER FOR FABRIC TO BE PULLED TIGHT AGAINST THE POST.
2. POST IN ROCK. WHERE SUBSTANTIAL ROCK IS ENCOUNTERED, A HOLE 1" LARGER IN DIAMETER THAN THE POST, AND OF 12" MIN. DEPTH FOR LINE POSTS, AND 1'-6" MINIMUM DEPTH FOR CORNER, END, AND INTERMEDIATE POSTS SHALL BE MADE. AFTER INSERTING THE POSTS, THE HOLES SHALL BE BACK FILLED WITH A HAND MIXED 1:2 MORTAR CONSISTING OF ONE PART PORTLAND CEMENT TO TWO PARTS FINE AGGREGATE MIXED TO A PLASTIC CONSISTENCY SHOWING NO SIGNS OF FREE WATER. THE HAND MIXING AND CONSOLIDATION OF THE MORTAR SHALL BE PERFORMED IN A MANNER APPROVED BY A ENGINEER.
3. CORNER POSTS SHALL BE USED AT BREAKS IN VERTICAL GRADE, AND CHANGES IN HORIZONTAL ALIGNMENT OF 15° AND OVER. PULL POSTS SHALL BE USED EVERY 492' ON RUNS OF CHAIN LINK FENCE OR AS DIRECTED BY THE ENGINEER.
4. DETAIL DRAWING FOR CHAIN LINK FENCE THAT THE CONTRACTOR PLANS TO ERECT SHALL BE SUBMITTED TO THE ENGINEER. NO FENCE SHALL BE ERECTED PRIOR TO THE APPROVAL OF THE VARIES DETAILS.
5. STEEL PIPE AND STEEL SHAPES INDICATED ON THIS SHEET SHALL NOT BE LIGHTER IN WEIGHT THAN 95% OF THAT SPECIFIED. THEY MAY EXCEED THE REQUIRED WEIGHT.
6. THE CONTRACTOR SHALL HAVE THE OPTION OF SETTING THE LINE POSTS IN 10"ø BY 3' DEEP CONCRETE BASES WITH THE POST EMBEDDED 2'-6" OR USING METHODS OF DRIVING AND ANCHORING SPECIFIED BY THE MANUFACTURER. HOWEVER, LINE POSTS WITH TRUSS RODS ATTACHED AND ALL END, CORNER AND INTERMEDIATE POSTS SHALL BE SET IN CONCRETE BASES. THESE CONCRETE BASES SHALL BE A MINIMUM OF 10"ø BY 3'-0" DEEP WITH THE POST EMBEDDED 2'-6" FOR FENCES 6' HIGH OR LESS AND 12"ø BY 3'-6" DEEP WITH THE POST EMBEDDED 3' FOR FENCES OVER 6' HIGH. FOR GATE POSTS SEE THE CURRENT STANDARD SHEET TITLED "GATES AND CHAINLINK FENCE ADJACENT TO GATE".
7. TOP TENSION WIRE SHALL BE FASTENED TO EACH POST IN A MANNER APPROVED BY THE ENGINEER.

POST AND RAIL SECTION

USE	SECTION	STEEL NPS DESIGNATOR	STEEL ROLLFORMED AND H POSTS	STEEL O.D.	STEEL WEIGHT LBS/FT	ALUMINUM NPS DESIGNATOR	ALUMINUM ROLLFORMED AND H POSTS	ALUMINUM O.D.	ALUMINUM WEIGHT LBS/FT
END, CORNER AND INTERMEDIATE POSTS FOR FENCES 6' AND UNDER	CLASS A SCHEDULE 40 PIPE	2		2⅜"	3.65	2		2⅜"	1.26
	CLASS B STEEL TUBING	2		2⅜"	3.12				
	CLASS C ROLLFORMED		3½" X 3½"		5.10				
END, CORNER AND INTERMEDIATE POSTS FOR FENCES OVER 6'	CLASS A SCHEDULE 40 PIPE	2½		2⅞	5.79	2½		2⅞"	2.00
	CLASS B STEEL TUBING	2½		2⅞	4.64				
	CLASS C ROLLFORMED		3½" X 3½"		5.10				
LINE POSTS FOR FENCES 6' AND UNDER	CLASS A SCHEDULE 40 PIPE	1½		1⅞"	2.72	1½		1⅞"	0.94
	CLASS B STEEL TUBING	1½		1⅞"	2.28				
	CLASS C ROLLFORMED		1⅞" X 1⅝"		1.85				
	H POSTS		2¼" X 1¾"		3.43		1⅞" X 1⅝"		0.90
	H POSTS						2¼" X 2"		1.22
LINE POSTS FOR FENCES GREATER THAN 6' AND EQUAL TO OR LESS THAN 8'	CLASS A SCHEDULE 40 PIPE	2		2⅜"	3.65	2		2⅜"	1.26
	CLASS B STEEL TUBING	2		2⅜"	3.12				
	CLASS C ROLLFORMED		1⅞" X 1⅝"		2.40				
	H POSTS		2¼" X 1¾"		3.43		1⅞" X 1⅝"		0.90
							2¼" X 2"		1.22
LINE POSTS FOR FENCES GREATER THAN 8' AND EQUAL TO OR LESS THAN 10'	CLASS A SCHEDULE 40 PIPE	2		2⅜"	3.65	2		2⅜"	1.26
	CLASS B STEEL TUBING	2		2⅜"	3.12				
	CLASS C ROLLFORMED		2¼" X 1¾"		2.78				
	H POSTS		2¼" X 1¾"		3.43		2¼" X 2"		1.22
LINE POSTS FOR FENCES OVER 10'	CLASS A SCHEDULE 40 PIPE	2½		2⅞"	5.79	2½		2⅞"	2.00
	CLASS B STEEL TUBING	2½		2⅞"	4.64				
	H POSTS		2¼" X 1¾"		3.43		2¼" X 2"		1.22

* DO NOT USE 3½" X 3½" ROLLFORMED POST ON FENCES OVER 8'

ACCESSORY	STEEL	ALUMINUM
FABRIC TIES FOR LINE POSTS	6 GA. ALUMINUM WIRE AT 14" O.C. MAX.	⅜"ø ALUMINUM WIRE AT 14" C.C. MAX OR ½" X ⅛" CLIPS AT 14" C.C. MAX.
FABRIC TIES FOR TENSION WIRE	11 GA. ALUMINUM WIRE 12" O.C. MAX.	⅛"ø ALUMINUM WIRE AT 12" C.C. MAX.
TOP & BOTTOM TENSION WIRE	7 GA. GALVANIZED STEEL	⅜"ø ALUMINUM WIRE

STATE OF NEW YORK
DEPARTMENT OF TRANSPORTATION
U.S. CUSTOMARY STANDARD SHEET
CHAINLINK FENCE WITH TOP TENSION WIRE
ERRATA 1 EFF. 01/09/2014 ISSUED WITH EB 13-042
EFFECTIVE DATE: 01/08/09
APPROVED: NOVEMBER 4, 2013
ISSUED UNDER EB 08-036
/S/ RICHARD W. LEE, P.E.
DEPUTY CHIEF ENGINEER, DESIGN (ACTING)
607-05

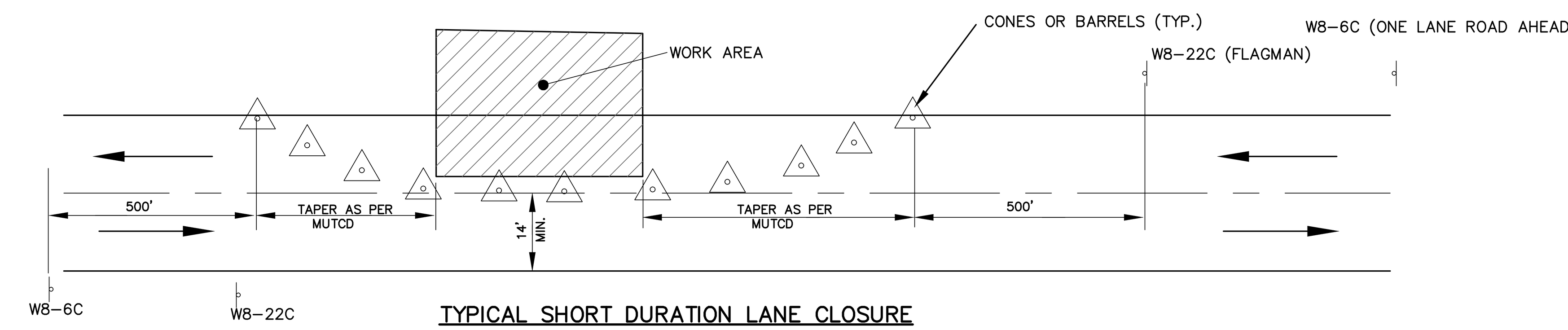

TYPICAL SHORT DURATION LANE CLOSURE
THERE SHALL BE NO LANE CLOSURES BEFORE 9:00 AM NOR AFTER 3:00 PM WEEKDAYS

1. MAINTENANCE AND PROTECTION OF TRAFFIC SHALL BE PROVIDED IN ACCORDANCE WITH SECTION 619 OF THE JANUARY 2, 1990 NYS STANDARD SPECIFICATIONS, ADDENDUM NO. 1 DATED 1/2/90, ADOPTED 11/18/93, AND THE NEW YORK STATE MANUAL FOR UNIFORM TRAFFIC CONTROL DEVICES (M.U.T.C.D.) DATED JULY 1, 1983 AND ALL OTHER APPLICABLE PROVISIONS CONTAINED IN THIS CONTRACT. ALL SIGN NUMBERS REFER TO THE M.U.T.C.D.

2. THE FINAL RESPONSIBILITY FOR THE PROTECTION OF THE TRAVELING PUBLIC AND HIS OWN PERSONNEL SHALL REST WITH THE CONTRACTOR.

3. PRIOR TO THE START OF WORK, THE CONTRACTOR MAY SUBMIT ANY PROPOSED CHANGES TO THE TRAFFIC CONTROL PLAN TO THE ENGINEER FOR APPROVAL. ANY CHANGE WHICH ALTERS THE BASIC CONCEPT OF THE PLAN MUST BE APPROVED BY THE REGIONAL DIRECTOR OR HIS DESIGNEE.

4. VEHICLES AND CONSTRUCTION EQUIPMENT BELONGING TO THE CONTRACTOR OR THE CONTRACTOR'S EMPLOYEES SHALL BE MOVED A MINIMUM OF 30 FEET FROM THE EDGE OF PAVEMENT DURING NON-WORKING HOURS.

5. DURING WORKING HOURS, NO CONSTRUCTION MATERIAL MAY BE STORED ON THE ROADWAY OR ROADBED EXCEPT IN A PROTECTED WORK ZONE.

6. THE CONTRACTOR SHALL MAINTAIN ACCESS TO ALL PROPERTIES IN THE VICINITY OF THE PROJECT SITE AT ALL TIMES.

7. SIGN LOCATIONS SHOWN ON THE PLANS ARE APPROXIMATE. ACTUAL LOCATION SHALL BE ADAPTED TO PREVAILING CONDITIONS.

8. SIGNS THAT ARE NOT APPLICABLE SHALL BE COVERED OR OBSCURED FROM SIGHT.

9. THE WB-22C FLAGGER SIGN SHALL BE USED WHENEVER FLAGGING OCCURS FOR MORE THAN A BRIEF PERIOD OF TIME. THE SIGN SHALL BE PROMPTLY REMOVED, COVERED OR FACED AWAY FROM TRAFFIC WHEN THE FLAGGING OPERATION CEASES.

10. THE SIGNS SHOWN FOR THE TYPICAL SHORT DURATION LANE CLOSURE ARE IN ADDITION TO THE "ROAD WORK 1500 FEET", "ROAD WORK 1000 FEET", "ROAD WORK 500 FEET", AND "END ROAD WORK" SIGNS TO BE INSTALLED ON ROUTE 7 EASTBOUND AND WESTBOUND.

11. THE CONTRACTOR SHALL BE RESPONSIBLE FOR MAINTAINING ALL TRAFFIC CONTROL DEVICES REQUIRED DURING CONSTRUCTION AND MAKING SURE ALL SIGNS, CONES AND BARRELS ARE IN PLACE AND IN GOOD CONDITION.

12. THE CONTRACTOR SHALL MAINTAIN ALL EXISTING SIGNS FOR THE DURATION OF THE PROJECT OR UNTIL NEW REPLACEMENT SIGNS ARE INSTALLED. ALL COSTS TO WORK AROUND, REPLACE ON TEMPORARY POSTS OR TO TEMPORARILY RELOCATE EXISTING SIGNS SHALL BE INCLUDED IN THE PRICE BID FOR ITEM 619.01 – BASIC MAINTENANCE & PROTECTION OF TRAFFIC.

13. LENGTH OF TAPERS SHOWN ON THE MAINTENANCE AND PROTECTION OF TRAFFIC GENERAL PLAN SHALL BE DETERMINED FROM SECTION 292.1(d) OF THE M.U.T.C.D.. CONE SPACING SHALL BE DETERMINED FROM SECTION 292.1(e) OF THE M.U.T.C.D..

14. PRIOR TO THE UTILIZATION OF THE INFORMATION SHOWN HERON, U.F.P.O. SHOULD BE NOTIFIED (1-800-962-7962) FOR THE VERIFICATION OF THE EXISTENCE OF ANY AND ALL SUCH UTILITIES.

15. IT SHALL BE THE CONTRACTOR'S SOLE RESPONSIBILITY FOR ANY DAMAGE INCURRED DURING EXCAVATION OPERATIONS. ALL COSTS RELATED TO THE REPAIR OF DAMAGED UTILITIES SHALL BE BORNE BY THE CONTRACTOR AT NO ADDITIONAL COST TO THE OWNER.

16. ALL CONSTRUCTION SIGNS SHALL BE PAID FOR UNDER ITEM 619.02. ALL CONSTRUCTION SIGNS SHALL BE MADE IN ACCORDANCE WITH SECTION 619-2.02.

17. WORK ZONES LEFT OVERNIGHT SHALL BE PROTECTED WITH THE APPROPRIATE WARNING SIGNS SUPPLEMENTED WITH TYPE "A" LOW INTENSITY WARNING LIGHTS. DRUMS OR BARRICADES SHALL BE USED FOR CHANNELIZATION. TWO-WAY TRAVEL SHALL BE PROVIDED DURING NON-WORKING HOURS.

18. THE CONTRACTOR SHALL SCHEDULE HIS CONSTRUCTION OPERATIONS IN A MANNER TO MINIMIZE THE LENGTH OF TIME WHEN DROP-OFFS ADJACENT TO THE TRAVEL LANES OCCUR. DROP-OFFS ADJACENT TO THE TRAVEL LANE SHALL NOT REMAIN OVERNIGHT.

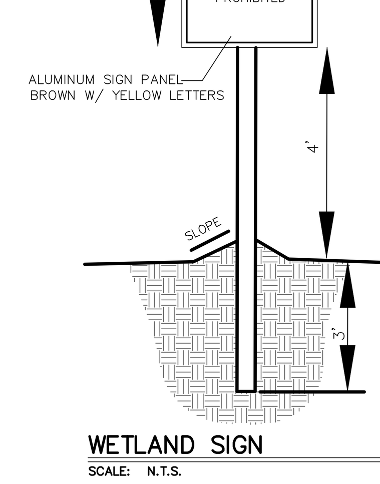

WETLAND SIGN
SCALE: N.T.S.

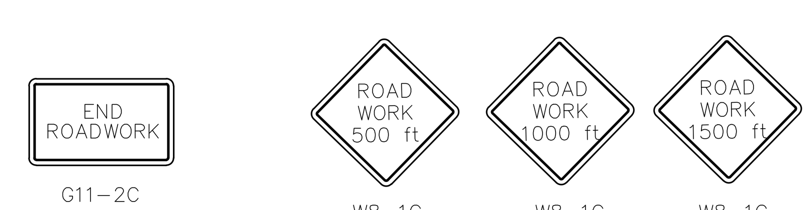

TYPICAL CONSTRUCTION SIGNS

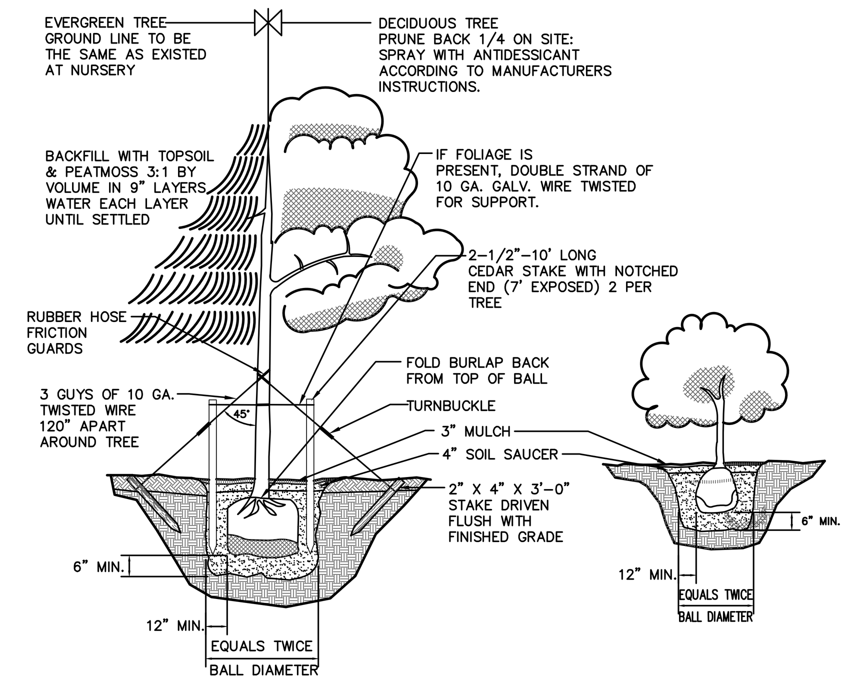

TYPICAL PLANTING DETAIL
N.T.S.

ciAlLIGNMENTNAME
C:\ADCADD\CIVIL\advdsgn\tplates\

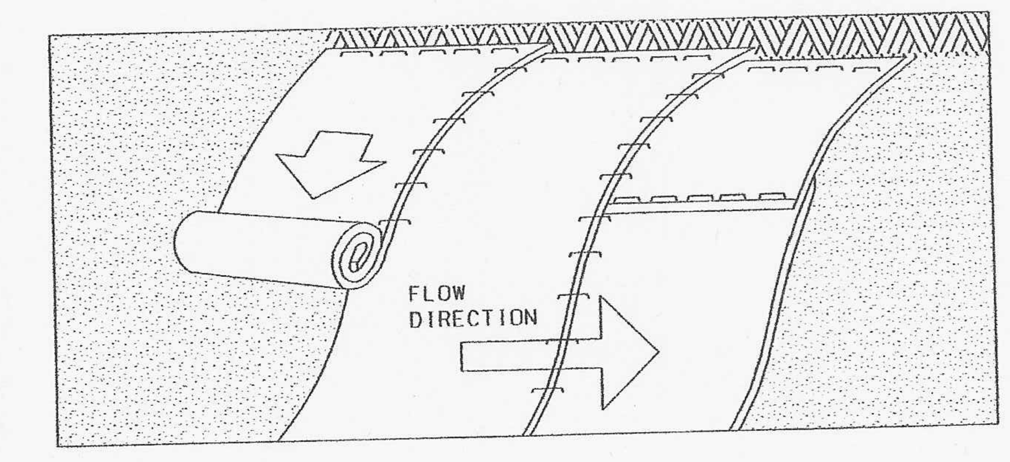

SLOPE INSTALLATION

NOTES:
1. PREPARE SOIL BEFORE INSTALLING BLANKETS, INCLUDING APPLICATION OF LIME, FERTILIZER, AND SEED.
2. BEGIN AT THE TOP OF THE SLOPE (OR CHANNEL) BY ANCHORING THE BLANKET IN A 6" DEEP X 6" WIDE TRENCH. BACKFILL AND COMPACT THE TRENCH AFTER STAPLING.
3. ROLL THE BLANKETS DOWN (STARTING AT DOWNSTREAM PROCEEDING UPSTREAM) HORIZONTALLY ACROSS THE SLOPE.
4. THE EDGES OF PARALLEL BLANKETS MUST BE STAPLED WITH AN APPROXIMATE (MIN) 4" OVERLAP.
5. WHEN BLANKETS MUST BE SPLICED DOWN THE SLOPE, PLACE BLANKETS END OVER END (SHINGLE STYLE) WITH APPROXIMATELY A (MIN) 6" OVERLAP. USE A DOUBLE ROW OF STAGGERED STAPLES 4" APART TO SECURE BLANKETS.
6. IN HIGH FLOW CHANNEL APPLICATIONS, A STAPLE CHECK SLOT IS RECOMMENDED AT 30 TO 40 FOOT INTERVALS. USE A ROW OF STAPLES 4" APART OVER ENTIRE WIDTH OF THE CHANNEL. PLACE A SECOND ROW 4" BELOW THE FIRST ROW IN A STAGGERED PATTERN.
7. THE TERMINAL END OF THE BLANKETS MUST BE ANCHORED IN A 6" DEEP X 6" WIDE TRENCH. BACKFILL AND COMPACT THE TRENCH AFTER STAPLING.

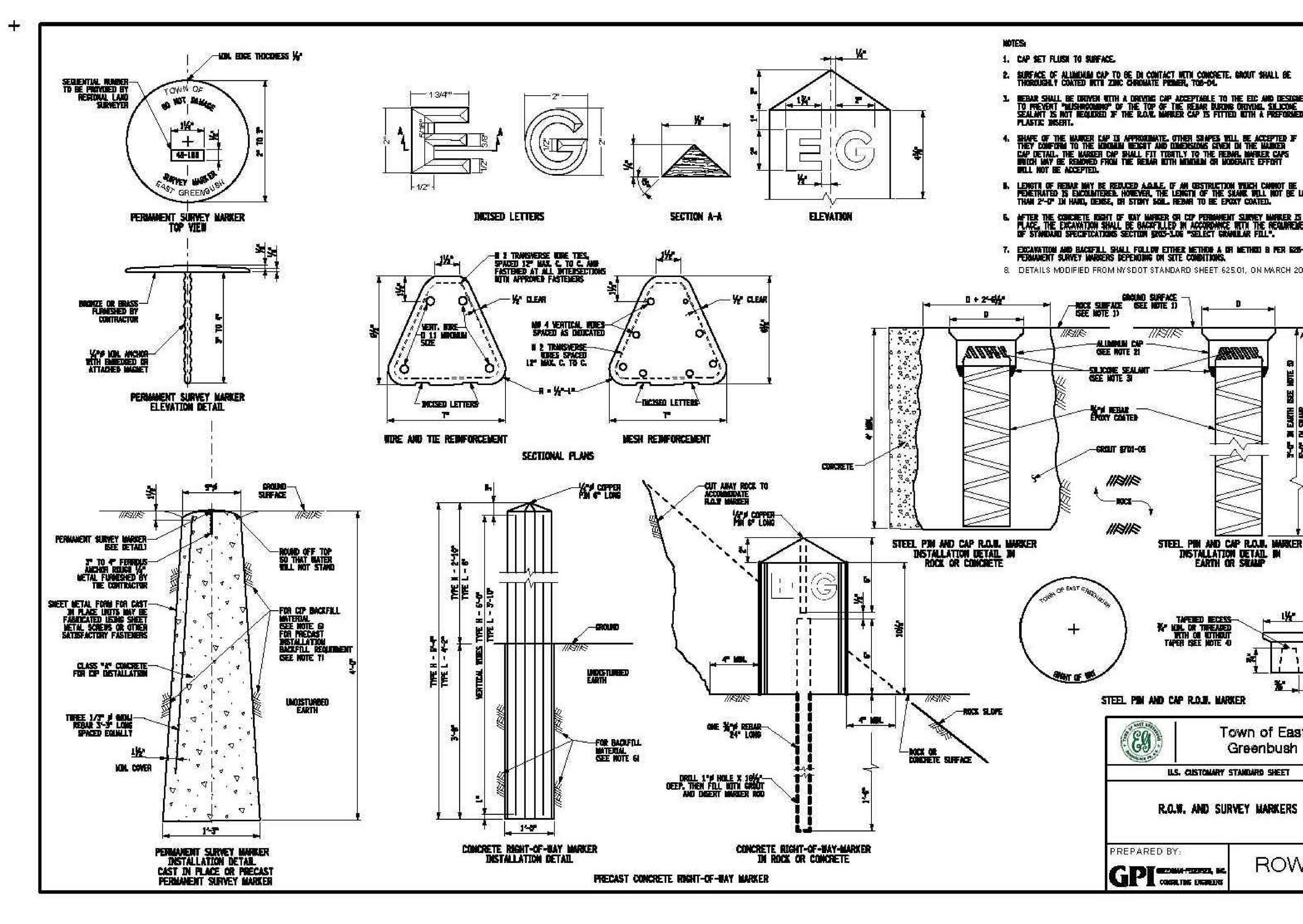

NOTE: 48 HOURS PRIOR TO ANY CONSTRUCTION ACTIVITIES, THE CONTRACTOR SHALL CONTACT THE U.F.P.O. TO LOCATE ALL UNDERGROUND UTILITIES. 1-800-962-7962

NO.	DATE:	REVISIONS	BY:
3	01/25/22	REVISED AS PER TDE AND E. GREENBUSH COMMENTS	
2	11/03/21	REVISED AS PER CAC AND USACOE COMMENTS	
1	7/27/21	REVISED AS PER TDE COMMENTS DATED 7/8/21	

BRETT L. STEENBURGH, P.E.
N.Y.S. LIC. NO. 075458

APPLICANT:
CLDZ LLC
494 WESTERN TURNPIKE
ALTAMONT, NY 12009

BRETT L. STEENBURGH, P.E. PLLC
2832 Rosendale Road
Niskayuna, NY 12309
(518) 365-0675
bsteenburghpe@gmail.com
ENGINEERING THAT TRANSFORMS IMAGINATION INTO REALITY
A comprehensive civil engineering firm with a personal touch

DETAILS
CLDZ, LLC
CARVER COURT
TOWN OF EAST GREENBUSH
COUNTY OF RENSSELAER STATE OF NEW YORK

DRAWN BY: BLS
CADD FILE:
CHECKED BY:
JOB NO.
SCALE: AS NOTED
DATE: FEBRUARY 15, 2021
SHEET DET-4